Design and manufacture of castor dynamic test equipment for testing 1.2-inch and 3-inch castor wheels at PT. MAK

Untung Dwi Mulyono[1], Febrianto Amri Ristadi[2*]

[1]Department of Mechanical Engineering, Diploma IV Program, Universitas Negeri Yogyakarta, Indonesia
[2]Department of Manufacturing Engineering, Universitas Negeri Yogyakarta, Indonesia
*Corresponding author, email: amri@uny.ac.id

Article history
Submitted: 5 October 2025
Revised: 20 November 2025
Accepted: 20 December 2025
Published: 30 December 2025

Keywords
Castor
Design
Dynamic Test Equipment
ISO 22879

Abstract
Quality testing of 1,2 – 3-inch castor wheels requires equipment that complies with international standards to guarantee its performance and safety. This research aims to produce a special dynamic test tool to test castors measuring 1-3 inches according to ISO 22879 standards. The scope of research includes analysis of test needs, design of motion mechanisms, selection of materials and components, manufacturing processes, and tool performance tests. The method used in this study is the Research and Development method. The steps of the research process carried out include problem analysis, exploration, product concept design, synthesis of forward and backward motion mechanisms, kinematic calculations, kinematics and dynamics analysis, tool design, design evaluation, detailed design of working drawings, preparation of tools and materials, manufacture of tools, ending with tool performance testing. This design resulted in a test device that uses a launcher crank mechanism with a crank length of 60 cm and a crank connection arm of 120 cm. The dimensions of the tool (W x W x H) are 2500 x 600 x 1200 mm with a 2 HP motor drive and a revolution of 1400 rpm reduced by two levels with a ratio of 1:60 and 1:4. Manufacturing is carried out by various fabrication and machining processes. The test equipment can be used to test castor for 477 test cycles according to ISO 22879 standards.

1. Introduction

Castor is an auxiliary component in the form of an immovable wheel that is designed to be installed on the bottom of an object (equipment) to facilitate the movement of the object if needed [1]. The design of castor wheels must pay attention to quality by paying attention to the standard reference that has been set [2]. In ensuring the quality of a product produced, a quality control activity is needed. The stages of quality control that can be carried out are by means of product testing. The product testing process is carried out to check and ensure the quality of the product in accordance with the standards that have been used. In the process of testing a product, testing will be carried out in stages to find out how long the product can survive [3].

Design is the initial activity of a series of activities in the process of making products [4]. Design is an activity in compiling and combining an idea with various things such as the materials used, the form of construction, the production process to be carried out, and the functionality of the object to be designed [5]. The important factors in the design process are: Standardization. Machine Elements, Materials, Shapes. Manufacture or Formation, Maintenance, and Economical [6].

Morphological analysis is a method used in problem solving using quality assessment to help solve problems both social and technical [7]. The morphology method is a method that can find many solutions or alternatives to product concepts, a systematic method and uses easy-to-understand steps [8]. Morphology in question is the study of shapes and characteristics, and is a systematic effort to analyze the shape or properties contained in the product to be designed [9]. The product concept is achieved by creating a combination of sub functional solutions, which are solutions from each subfunction.

Kinematic Analysis aims to develop various ways to change motion in achieving a certain goal according to the required application [10]. For example, an object must move from point A to point B along a given path [11]. Kinematics is the science of geometric motion related to the movement of objects [12]. Kinematic analysis includes the determination of positioning, displacement, rotation (displacement), speed, and acceleration of a mechanism [13]. Dynamics Analysis aims to analyze the behavior of a given machine or mechanism when experiencing dynamic forces. For example, when the mechanism is known, external forces of attraction will be applied and motion will be studied. Part of this analysis is the determination of the forces caused by movement on the parts of the machine [11]. Inline crank slider Mechanism design [11], shown in Figure 1.

© 2025 The Author(s)
This work is licensed under a Creative Commons Attribution-ShareAlike 4.0 International License
ISSN: 3110-1577

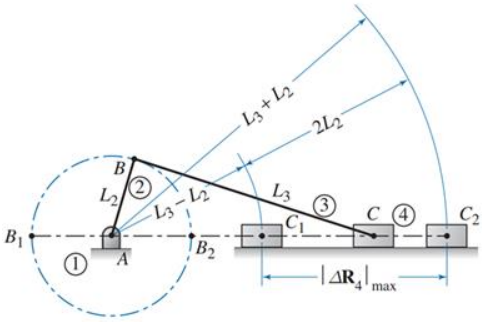

Figure 1. Inline crank slider mechanism

The step of the inline crank mechanism is twice the length of the crank. Or in other words, the distance between B1 and B2 is equal to the distance between C1 and C2. Therefore, the crank length (L2) for the inline crank slider mechanism is show in equation 1.

$$L2 = \frac{|\Delta R_4|max}{2} \quad (1)$$

The creation of image designs is carried out with software using techniques (product design) which are often known as CAD (Computer Aided and Design) and analysis models or CAE (Computer-Aided Engineering) [14]. CAD software is classified as a program in the form of application software that facilitates design functions in the design process, CAD software in the form of geometric modeling, mass properties calculation and element modeling tolerance analysis [15], while CAE is a technology related to the use of computer devices in the calculation and analysis of the influence of load on the geometry of CAD models [16].

In the system designing the mechanism of the machine should be observed. A mechanism as a device for transmitting, controlling, or restricting relative motion. Engines typically contain mechanisms designed to generate power and transmit significant power [17]. The selection of the right materials also affects the quality of the products made. The identification of the right materials is a meeting point between various properties, environments, and ways of using materials so that they can meet the requirements that have been determined [18]. The things that need to be considered in the selection of materials include: The function of each component, the strength of the material, the ease of obtaining the material, the ease of material processing, the efficiency of the material, and the price of the material [18].

The selection of the right materials is the first step that greatly determines the success of the manufacturing process. Manufacturing is the application of physical and chemical processes to change the shape, geometry, properties and appearance of certain initial materials to produce a component or product. In addition, manufacturing also includes the assembly of several parts of raw materials, components and a set of components to make a product [19]. The purpose of the manufacturing process is to make or produce various kinds of components from certain materials by referring to their shape, size, and structure.

In achieving product goals that meet design standards, a raw material must go through a series of work activity processes in making or building something in various ways, both manual and automatic using various production site equipment [20]. The following is the manufacturing process of the test kit, among others: Welding, according to the definition of *Deutche Industrie Normen* (DIN) welding is the metallurgical bonding of a metal or alloy metal joint that is carried out in a molten or melting condition. From this understanding, welding can be further interpreted as the local joining of several metal rods using heat energy [21]. The bending process is carried out by bending the workpiece until it changes shape so that it causes the metal to stretch around the area of the straight line (in this case the neutral axis). As is known, sheet metal that has a waveform has a higher rigidity than plates with flat sheets [22].

Lathe machining process. The turning process is a machining process to produce machine components that have a cylindrical shape that are done using a lathe. Lathe machining can be done by two methods, the first is by conventional method and CNC (Computer Numerically Controlled). Gurdi machining process (drilling). The gurdi process is designed for the purpose of making round holes using a twist drill. Meanwhile, the drilling process (boring) is a machining process that is carried out to enlarge/expand the hole using a drill rod (boring bar) which can be done not only on a drilling machine, but also on a lathe, frais machine or drilling machine. EDM machining process. The Electrical Discharge Machining process is a non-conventional metal cutting technology that utilizes heat energy. The EDM process is a metal cutting method that uses scraping that occurs as a result of electric sparks. Electric sparks occur periodically in the gap between the cathode (workpiece) and the anode (chisel) in the dielectric fluid. Electric sparks cause the high-speed centering of electron streams to crash into the surface of the workpiece [23].

Although ISO 22879 provides clear requirements for testing castor wheels, many existing test methods in the industry still rely on manual equipment or setups that do not fully comply with the standard. This results in inconsistent or inaccurate test outcomes. Furthermore, commercially available dynamic test rigs that can accommodate multiple castor sizes (1–3 inches) while meeting ISO specifications are limited, particularly for small-to-medium-scale manufacturing facilities. Therefore, there is a need for a dedicated, versatile, and standard-compliant dynamic test device that is both practical and efficient for industrial use.

This research aims to design and manufacture a special dynamic test device that can be used to test castors of 1–3 inches in accordance with the ISO 22879 standard. This design includes requirements analysis, kinematics and dynamics calculations, material selection, manufacturing processes, and tool performance testing to ensure the tool can function properly and produce valid test results.

2. Method

The method used in this study is the R&D (Research and Development) method with a 4D (four-D) research model. The 4D model of research and development consists of 4 stages, namely; define, design, develop, and disseminate [24]. This method is used because later a new product will be produced to be used in helping the testing work process by paying attention to the standard criteria that have been set of a product that is made, produced through various stages and validation or testing. The flow of the research process can be seen in Figure 2.

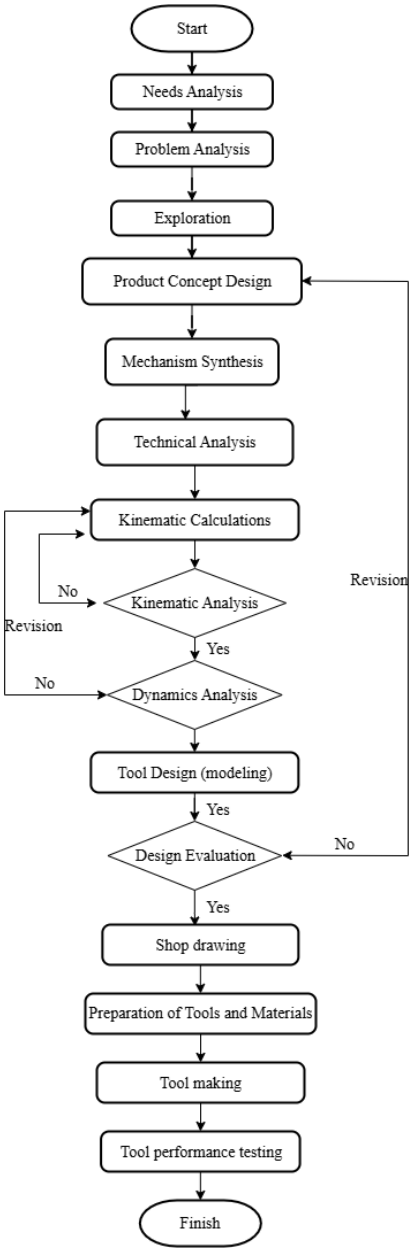

Figure 2. Research process flowchart

The process of designing and manufacturing castor dynamic test equipment was carried out at PT MAK. The time spent in the design and manufacture process of castor dynamic test equipment which includes the design and manufacturing process is carried out in a span of 2-3 months, after the proposal is approved.

In the design process, the tool used to facilitate the work process uses the help of ASUS A556U series laptop devices with the materials used for the design process is Autodesk Inventor 2019 software. Meanwhile, the material used in simulating the tool mechanism system is the Artas SAM 6.1 software. The tools used in manufacturing include: Pipe Cutting Laser Machines, Plate Cutting Laser Machines, CNC Lathes, Conventional Lathes, Bending Machines, EDM Machines, Sitting Drilling Machines, MIG Welding Machines, tap threads, Band Saw Machines, and Hand Grinders. Material needs in manufacturing include: Pipe (Hollow), Plate (Plate), Axle (Solid Iron), Bearings, Electric Motors, and Speed Reducers.

3. Results and Discussion

3.1. Technical Calculations

3.1.1. Calculation of Tool Mechanism System Design

The results of the design of the castor dynamic test equipment system design system are stated in the following Figure 3.

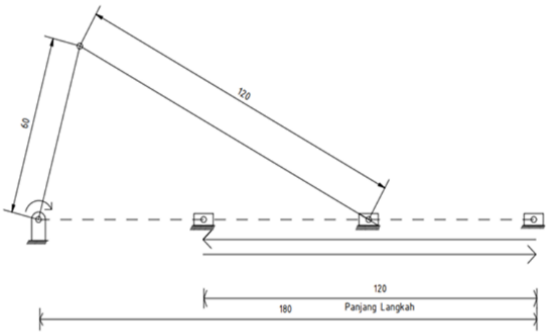

Figure 3. Mechanism calculation design

The results of the calculation of the mechanism system in Equation 2 state that the length of the L2 is 600 mm (60 cm), for the length of the crank joint (L3) is 2 x ≥ the crankshaft or by 1200 mm (120 cm).

$$L2 = \frac{1200}{2} = 600\ mm \quad (2)$$

3.1.2. Tool Transmission System Calculation

The rotation of the motor is 1400 rpm. The speed reducer used has a ratio of 1:60. So the initial rotation (N1) = 1400 rpm, (N2), after reducing the speed reducer = 23.33, after reducing the gears, then the magnitude of N3 is: Desired rev ratio 6.5 rpm

N3 → 23,33 x (X) = 6,5 rpm
N3 → X = 0,278

3.1.3. Inline Crank Type Mechanism Design Calculation

Calculate Time Value for simulation in Artas SAM Software. A crankshaft that rotates 6.5 cycles/minutes = 6.5 rpm (rotation per minutes) is required so that:

$$N = 6.5\ \frac{Round}{Minute} \quad (3)$$

$$N = \frac{6{,}5\ x\ 360^o}{60\ sec}$$

$$N = 39^o/\text{sec}$$

So for 1 spin = 360° traveled in 9.23 secons

$$\frac{360^o}{39^o/_{dtk}} = 9{,}23\ sec \quad (4)$$

From the results of the calculation above, the time value in the simulation parameter of the Artas SAM software input simulation is 9.23 seconds.

3.2. Design of the Kinematics and Dynamics Analysis Simulation of Artas SAM 6.1

The software used to support the kinematic and dynamic analysis process is in the form of Artas SAM 6.1. This software will simulate the motion of the castor dynamic test tool mechanism system to display the results of motion simulation numerically and graphically.

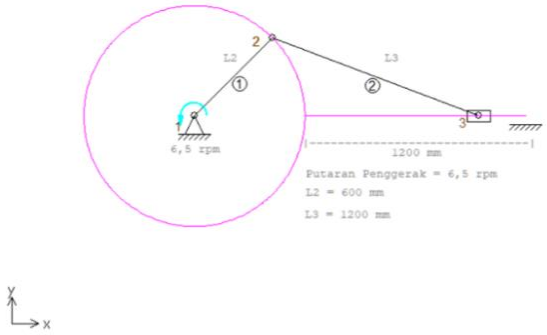

Figure 4. Design of castor dynamic test equipment mechanism on Artas SAM

3.3. Kinematics and Dynamics Analysis of Dynamic Test Equipment

3.3.1. Kinematic Analysis of Linear Velocity and Absolute Acceleration to Relative Angle

The highest castor linear velocity value at point 3 is 458.75 mm/s when the crank is at an angle of 68o and 292o at that angle the castor position is close to the point of the obstacle. Meanwhile, the value of the linear velocity at point 2 is constant according to the crank rotation (0.68074 rad/s) at 408.44 mm/s. The speed analysis graph is shown in Figure 5.

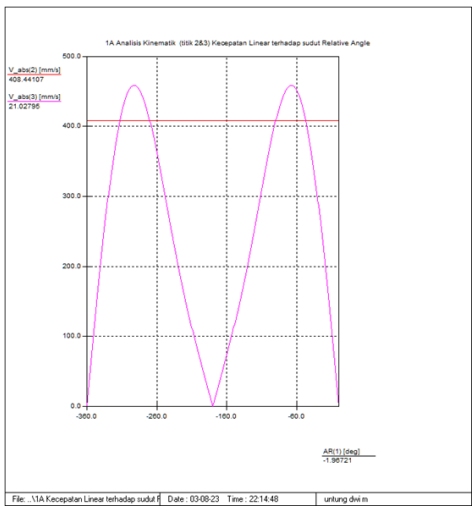

Figure 5. Linear velocity analysis graph against relative angle

The absolute acceleration value to the relative angle of point 3 has increased and decreased, the highest value at point 3 is 417.06 mm/s2 when the crank is at an angle of 360° (horizontal position) and the lowest acceleration value is 2.68 mm/s2 when the crank is at an angle of 62° and 292° at that angle the position of the caster is close to the point of the obstacle location. Meanwhile, the acceleration value at point 2 is constant at 278.04 mm/s2.

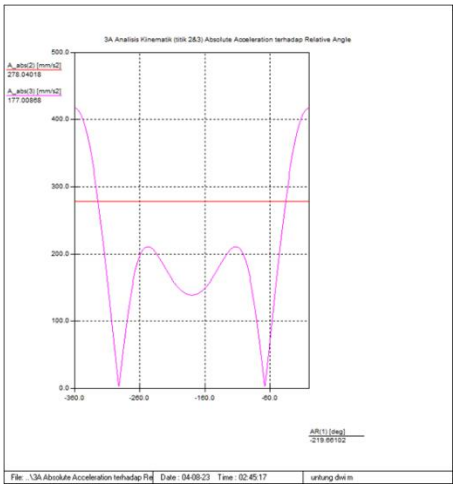

Figure 6. Graph of absolute acceleration to relative angle

3.4. Design and Construction of Castor Dynamic Test Equipment

From the results of the design engineering, this castor dynamic test equipment has several main constituent components consisting of, tool frame, frame plate, obstacle, drive mount frame, drive mount frame plate, rail support frame, rail, drive between motor and speed reducer (gearbox). The drive uses an electric motor with an engine rotation of 1400 rpm paired with a speed reducer with a ratio of 1:60. The transmission system uses gear components, in order to obtain a rotational speed that is in accordance with the standard reference used, using a 1:4 gear ratio. The frame used is a type of hollow pipe variant both in the tool frame, drive mount frame, load bearing frame and rail support frame. The overall dimensions of the castor dynamic tester are 2500 x 600 x 1200 mm. The results of the design are shown in Figure 7.



Figure 7. Design and build dynamic test equipment

3.5. Morphological Analysis Results of Test Equipment

The morphological analysis was conducted to determine the optimal selection of materials and components for each part of the dynamic castor test equipment. The final selected variants for each component are as follows:

a. Main Frame – Variant 3 hollow steel pipe was selected for the main frame due to its high structural strength and ease of fabrication.

b. Drive Support Frame – Variant 2 hollow steel pipe was chosen for the drive support frame, providing adequate rigidity with a lighter weight.

c. Rail Supports – Variant 2 hollow steel pipe was selected for rail supports, ensuring stability and resistance to deformation.

d. Load Support Frame – Variant 1 hollow steel pipe was used for the load support frame to maintain structural integrity while minimizing material usage.

e. Drive System – Variant 2 electric motor was chosen to generate the required motion for the testing mechanism.

f. Speed Reducer – Variant 1 vertical reducer was selected to adjust rotational speed to the required operational level.

g. Transmission System – Variant 3 gear set was selected for reliable power transmission and consistent motion.

h. Sliding Mechanism – Variant 1 rolling bearing was selected to reduce friction and ensure smooth linear motion.

i. Drive Arm – Variant 1 steel plate was chosen for the drive arm to provide strength and durability under repetitive loads.

j. Drive Arm Joint – Variant 1 hollow steel pipe was selected due to its ease of machining and flexibility in assembly.

k. Obstacle Element – Variant 1 steel plate was used to fabricate the obstacle in compliance with ISO 22879 specifications.

l. Base Plate – Variant 1 plate material was chosen for the base to provide a stable foundation for the entire structure.

m. Shafts – Variant 1 solid shaft was used for all rotating components to ensure load-bearing capacity and operational stability.

3.6. Machining Process

Conventional lathe machining process. The conventional (manual) lathe machining process is used in the manufacture of cylindrical components which include: Load mount shaft, Crank gearbox bush, Crank bushing, Load shaft bushing, Locking ring, and gearbox bushing

CNC machining process. The CNC lathe machining process is used in the process of manufacturing cylindrical components with the addition of 5/8 UNC threads on the castor mounting shaft.

EDM (Electrical Discharge Machining) Process. The EDM process is used to create workpieces that are difficult to shape with conventional cutting tools and also with very small tolerance sizes. The result of the EDM process is as follows: Spied bush crank box and Spied bush gearbox.

Bending process. The result of the bending process is a rell component. Where in its manufacture it uses a 2 mm thick Mild Steel plate with a rell length of 1500mm.

Drilling process (gurdi). Carried out using a seated drilling machine to make holes in several components including: Bottom frame plate obstacle pair bolt holes, obstacle plate bolt holes, drive mount plate bolt holes, crankshaft bush bush locking bolt holes, gearbox bush locking bolt holes, motor bush locking bolt holes.

Tapping process. The tapping process or thread making process, the thread making process is carried out with the help of tools in the form of Tap and Tap Holder. The components of the test equipment that use the tapping process are as follows: Screw bolt obstacle plate lower frame and Thread drive mount plate which has a thread specification of M10 x 1.5. Screw locking bush crank box, Thread locking bush motor and Thread locking bush gearbox which has the specification of thread M6 x 1.

3.7. Fabrication Process

3.7.1. Material cutting process

Laser cutting machine pipe cutter. Laser pipe cutting machine is used to produce component pieces with pipe-shaped base materials such as: Lower frame components, Drive mount frame components, Rail support frame components, Load mount frame components, which use Mild Steel Pipe raw materials size 40 x 20 x 2mm and Crank connections which use Mild Steel Pipe raw materials size 40 x 20 x 2mm.

Laser cutting machine plate cutter. Laser plate cutting machine is used to produce component pieces from the base material of plate sheets such as: Lower frame plate, Drive mount frame plate and Reinforcing plate

using Mild Steel Plate raw material with a thickness of 6mm. Obstacle plate and Plate of rail making material, which uses Mild Steel Plate with 2mm thickness. As well as crank sleeve plates, which use Plate Mild Steel raw materials with a thickness of 5mm.

Bandsaw machine. A bandsaw machine is a manual material cutting tool used for the process of cutting material components that have a shape in the form of AS (solid iron) such as: Load shaft bushings on the load frame components and crankcase gearbox bushings that use US Mild Steel raw materials with ø 2 inches. Load mount shaft, Castor mount shaft, Bush crank and locking ring using US Mild Steel raw material with ø 11/4 inch. As well as the bush gearbox, which uses US Mild Steel raw material with ø 11/2 inches.

Welding Process. The welding process uses the MIG KEMPPI Kempo MAT 2500 W welding machine. After all materials and sub-components are ready, the welding process is required to combine/unite all the sub-sub-component parts to become a complex product unit. The welding process carried out includes: Manufacture of tool frame parts and installation of tool frame plates, drive mount frames and drive mount plate mounts, rail support frames and rail welding, load bearing frames and load mount shaft mounting, welding of crank joint components with crank bushes, crankshaft components with crankshaft bushes and gearbox bushes with gears.

3.8. Functionality Test

3.8.1. Test acceptance criteria

Each Caster must remain capable of performing its functions at the end of the test program, once the test is complete, rolling, rotating or braking performance must not be disturbed. According to the ISO 22879 Standard on furniture castors (1.2 and 3-inch castors) testing is carried out as many as 500-505 cycles for type H.

3.8.2. Parameters used in testing

According to the ISO 22879 standard the recommended test load is 400 N (40 kg). In the testing practice, a load of 39.04 kg was used. Using a 2 mm obstacle thickness with a test time cycle of 3 minutes of motion and 2 minutes of rest. A total of 477 test cycles were carried out in accordance with the standards used.

3.8.3. Types of castors and sizes

In this study, the author conducted tests on the type of castor type H (has a hard footprint) with a castor size of 2 inches.



Figure 8. Early conditions of castor

The castor used for testing is a relatively new product (NEW) with Type H type (has a hard base). It has a diameter of 50.39 mm.



Figure 9. Castor condition after 477 test cycles

After testing according to the test standard, there were 476.62 cycles. The condition of the castor is in good condition, there are no broken or detached parts. And the castor wheel can still rotate smoothly. So hereby the castor is declared to have passed the test.

3.9. Test results

The test results by paying attention to the test parameters in accordance with the ISO 22879 test standard resulted in the conclusion that castor products were declared to have passed the test in accordance with the standard test acceptance criteria stated on the test form. With this, the dynamic test equipment is already functioning properly and can be used as it functions.

4. Conclusion

From the results and discussion of the research on castor dynamic test equipment that has been written in the previous sub-chapter, it can be concluded that:

Technical calculations have been carried out and produced an output according to the ISO 22879 standard used, which is a step length of 100 cm with a speed of 6.5 cycles/minutes. Maximum load is 400 N for 476.72 cycles. These parameters were analyzed kinematically and dynamically using Artas SAM 6.1 software.

The result of designing the tool to meet the step distance to comply with the ISO 22879 standard. This test device has a launcher crank mechanism with a crank arm length of 60 cm and a crank joint of 120cm. The dimensions of the tool are 2500 long x 600 wide x 1200 mm high. The drive uses a 2 HP Wipro electric motor with a speed of 1400 rpm reduced by two levels with a ratio of 1:60 and 1:4.

The process of making test equipment is carried out by various fabrication processes and machining processes. The fabrication process carried out includes: cutting, bending and welding. The machining process carried out includes: conventional and CNC lathe machining, EDM, drilling, and tapping. And the last step is assembly.

The results of the performance of the castor dynamic test tool show that the test tool can be used to test a castor wheel with a size of 2 inches type H (hard tread) with a test load of 40 kg for 477 cycles. From the number of test cycles that have been carried out, castor products are declared to have successfully passed the test in accordance with the acceptance criteria according to the ISO 22879 testing standard used.

Author Contributions

All authors have equal contributions to the paper. All the authors have read and approved the final manuscript.

Funding

No funding support was received.

Declaration of Conflicting Interests

The author declared no potential conflicts of interest with respect to the research, authorship, and/ or publication of this article.

Data Availability

The datasets generated during and/ or analysed during the current study are available from the corresponding author on reasonable request.

References

[1] A. Ayomikun, "Development of an Automatic 3 Tons Pallet Jack," *Automot. Eng.*, no. August, 2019, doi: 10.13140/RG.2.2.31998.95048.

[2] N. U. Handayani, S. Nugroho W.P, and H. A. Wibowo, "Upaya Peningkatan Kualitas Pada Pembuatan Roda Castor 5 " Menggunakan Metode Six Sigma Dan Pengendalian Proses Statistik," *J. Ilm. Tek. Ind. Univ. Diponegoro*, vol. Vol 2, no. No 1, 2006.

[3] E. Herlina, F. H. E. Prabowo, and D. Nuraida, "Analisis Pengendalian Mutu Dalam Meningkatkan Proses Produksi," *J. Fokus Manaj. Bisnis*, vol. 11, no. 2, p. 173, 2021, doi: 10.12928/fokus.v11i2.4263.

[4] H. H. D, *Pengantar Perancangan Teknik atau Produk*. Institit Teknologi Bandung, Bandung, 2004.

[5] H. Goutama, G. Mulyono, and P. F. Nilasari, "Perancangan Produk Interior Modular Multifungsi Berbasis Material Kayu Olahan," *J. INTRA*, vol. 6, no. 2, pp. 69–77, 2018, [Online]. Available: https://publication.petra.ac.id/index.php/desain-interior/article/view/7160

[6] F. A. Pardede, D. N. Peranginangin, S. Sebayang, and K. Tarigan, "Rancang Bangun Mesin Sebagai Pemisah Antara Daun Dengan Lidi Kelapa Sawit Menggunakan Roll Sebagai Penarik Dengan Kapasitas 7 Kg/Jam," *J. Teknol. Mesin Uda*, vol. 3, no. 2, pp. 13–23, 2022.

[7] B. B. Wahyujati, *Metode Perancangan: Rangkuman Teori dan Aplikasi*. Sanata Dharma University Press, Yogyakarta, 2022.

[8] T. Ritchey, "Futures Studies using Morphological Analysis," *UN Univ. Futur. Res. Methodol. Ser.*, no. 3.0, pp. 2005–2008, 2009.

[9] P. Putra, N. Hartawan, E. Diputra, and I. Widharma, "35) Analisis Penerapan Morfology Concept pada Perancangan dan Pengembangan Traktor Sawah," vol. 1, no. 1, pp. 30–35, 2023.

[10] J. Andika and K. S. Salamah, "Analisis kinematik pada robot hexapod," *J. Teknol. Elektro*, vol. 9, no. 2, pp. 83–91, 2018, [Online]. Available: https://publikasi.mercubuana.ac.id/files/journals/4/articles/4072/submission/original/4072-7845-1-SM.pdf

[11] O. Vinogradov, *Fundamentals of kinematics and dynamics of machines and mechanisms*. CRC press, 2000. doi: https://doi.org/10.1201/9781420042337.

[12] M. Taufiq and I. Kaniawati, "Mekanika Newtonian dan Signifikansi Filosofisnya," *J. Filsafat Indones.*, vol. 6, no. 2, pp. 246–257, 2023, doi: 10.23887/jfi.v6i2.53649.

[13] D. N. Ramadhani, A. Widodo, and T. Prahasto, "Analisis kinematika mekanisme kopling oldham," *J. Tek. Mesin*, vol. 10, no. 3, pp. 399–404, 2022, [Online]. Available: https://ejournal3.undip.ac.id/index.php/jtm

[14] I. R. Aminudin and S. Aritonang, "Teknik Rekayasa Terbalik Dengan Aplikasi Compute-Aided Design Model Computer-Aided Engineering Reverse Engineering Technique With Computer-Aided Design Application and Computer-Aided Engineering Model," *J. Teknol. Daya Gerak*, vol. 4, no. 2, pp. 56–65, 2021.

[15] D. Seprianto, "Perancangan Alat Blending/Mixing Menggunakan Perangkat Lunak CAD Autodesk Inventor Professional 2010," *J. Austenit*, vol. 3, no. 1, pp. 52–60, 2011, [Online]. Available: https://jurnal.polsri.ac.id/index.php/austenit/article/view/122

[16] R. A. Harahap and C. A. P. P. Siregar, "Analisa Beban Static pada Tabung APAR Tepung Biji Durian Menggunakan Metode CAE (Computer Aided Engineering)," *J. Vor.*, vol. 04, no. 02, pp. 303–316, 2023, doi: 10.54123/vorteks.v4i2.308.

[17] A. Kawamoto, "Generation of Articulated Mechanisms by Optimization Techniques Generation of Articulated Mechanisms by Optimization Techniques by Department of Mathematics Technical University of Denmark," no. October, 2014.

[18] B. . Amstead and S. Djaprie, *Teknologi Mekanik*, Jilid 1. PT. Erlangga, Jakarta, 1995.

[19] Groover and M. P., *Fundamentals of Modern Manufacturing Material, Processes, and Systems*. 2013.

[20] A. Daniarsyah, *Fabrikasi dalam Industri —Definisi, Jenis, Proses, dan Contoh Produknya*. 2021. doi: https://wira.co.id/fabrikasi-adalah/.

[21] H. Wiryosumarto and T. Okumura, *Teknologi Pengelasan Logam*. Pradya Paramita : Jakarta, 2000.

[22] S. R. Schmid and S. Kalpakjian, *Manufacturing processes for engineering materials (5thed).* Printce Hall. Singapore, 2008.

[23] Widarto, W. Sentot, Sutopo, and Paryanto, *Teknik Pemesinan*. Depdiknas, Jakarta, 2008.

[24] S. Thiagarajan, D. . Semmel, and M. L. Semmel, *Instructional development for training teachers of exceptional children: A sourcebook*. Bloomington Indiana: Indiana University, 1974. doi: 10.1016/0022-4405(76)90066-2.