Development of the garuda UNY urban car chassis and strength analysis using Finite Element Analysis (FEA)

Rizky Avika[1]*, Febrianto Amri Ristadi[2]

[1]Department of Mechanical and Automotive Engineering, Faculty of Vocational Studies, Universitas Negeri Yogyakarta, Indonesia

[2]Department of Manufacturing Engineering, Faculty of Engineering, Universitas Negeri Yogyakarta, Indonesia

*Corresponding author, email: rizkyavika.2020@student.uny.ac.id

Article history
Submitted: 10 October 2025
Revised: 20 November 2025
Accepted: 20 December 2025
Published: 25 December 2025

Keywords
Bending stiffness
Chassis
Finite element analysis
Torsional stiffness

Abstract
The objectives of the Garuda UNY Team Urban Car chassis development research are: to analyse the simulation results on the deformation value, von misses stress, and safety factor value; to know the results of the bending stiffnes value on the chassis design; to know the results of the torsional stiffnes value on the chassis design; and to get the chassis design that has the best strength. The method used is Research and Development with the subject of urban car chassis design that has been designed. This research was conducted using the Ansys Workbench 2022 R1 application to determine the difference in strength that occurs in each chassis design variation with the initial design chassis as a guideline and reference in data collection. The material used in the research is 6063-T6 Aluminium. The data analysis technique used in the research to process simulation result data is using descriptive analysis method. The results of the simulation in this study show a difference in the strength value of each chassis design variation. In the bending simulation research, a loading of 750 N was applied to the driver's room area, 200 N loading was applied to the engine compartment area and powertrain system, and 140 N loading from the chassis weight. Then, in the torsional simulation, a loading of 225.24 N is applied to both front wheels with opposing forces. Chassis design variation B has the best strength with a bending stiffness value of 3.313 KN/mm and a torsional stiffness value of 854.5 Nm/deg.

1. Introduction

Garuda UNY Team is one of the Student Activity Units (UKM) under the auspices of the Engineering Technology UKM of Yogyakarta State University. Garuda UNY Team was established in 2009 which focuses on development and research in the automotive world. Currently, there are several cars that have been made and developed, one of which is urban cars. Urban cars are vehicles that are designed to be fuel-efficient and have a shape similar to passenger cars used in cities, but much smaller in size. Urban cars have almost the same design as passenger cars in general, this car has a closed body, modern design, advanced technology, has a chassis frame, has 4 wheels, and has a driver's room or cockpit. Urban cars were created with the aim of improving the efficiency of fuel use. Increasingly depleted energy sources require us to be able to think critically to create a technology that has a high level of efficiency [1]. Urban cars are a solution related to sustainable transportation with environmentally friendly technology [2].

Garuda UNY Team's urban cars are contested in the Shell Eco Marathon competition for the international level and the Energy Efficient Car Contest (KMHE) for the national level. There are several factors that must be considered in creating an urban car in order to maximize the car to achieve a high level of efficiency. Some factors that must be considered include: vehicle weight, stability of the vehicle, efficient engine, good drive and transmission system, and aerodynamics of the vehicle's body shape [3].

The chassis is the main part of the vehicle which functions as the foundation or support of the entire vehicle including parts in the engine system, steering system, drive system, and braking system[4]. A good chassis must have good stiffness to fit all parts of the car in all conditions [5]. The chassis of the Garuda UNY Team urban car uses a ladderframe type and uses alluminium hollow material 6063-T6 series with dimensions of 50 x 25 x 3 mm and 25 x 25 x 2 mm. The choice of a strong but still lightweight material is the reason why aluminum is used as the main material in making the chassis. In the regulations in the competition, urban car drivers are set with a minimum weight of 70 Kg.

The problem with the previous chassis design is that the chassis still experiences excessive deformation values in the rear wheel mount and the transmission/power transfer system mount. With this deformation, the stability of the vehicle decreases which has an impact on energy loss/excess energy losses when the car moves

© 2025 The Author(s)
This work is licensed under a Creative Commons Attribution-ShareAlike 4.0 International License
ISSN: 3110-1577

[6]. This will greatly affect the efficiency of the vehicle because the rotation of the vehicle is not optimal. In addition to deformation problems, the process of providing holes in the hollow cross-section and strengthening the chassis construction is still not optimal. This shows that the strength of the previous chassis design can still be optimized to increase the strength value of the structure. Static loading is better known for measuring bending stiffnes (the stiffness of the bending load). Meanwhile, dynamic loading is better known for measuring torsional stiffnes (the stiffness of the torsional load). Therefore, chassis planning must consider both types of loading so that the vehicle's chassis can function properly and safety [7].

From the above background, the following problems can be identified: the demands of the Garuda UNY Team to improve or develop each vehicle component every year; It is necessary to carry out simulations before the production process by conducting analysis without damaging the chassis, so that analysis is applied using the Finite Element Analysis (FEA) method and, optimization of the previous chassis design, because the previous design still has a considerable deformation value.

The formulation of the problems discussed in this study are: first, what are the results of the deformation value analysis in the development of the Garuda UNY Team Urban Car chassis using the Finite Element Analysis (FEA) method?, second, what are the results of the analysis of the von misses voltage value in the development of the Garuda UNY Team Urban Car chassis using the Finite Element Analysis (FEA) method?, third, what are the results of the analysis of the safety factor value in the development of the Garuda UNY Team Urban Car chassis using the Finite Element Analysis (FEA) method?, fourth, what are the results of the analysis of bending stiffness and torsional stiffness strength in the development of Garuda UNY Team urban car chassis?, and fifth, how is the development of the Garuda UNY Team Urban Car chassis construction that has the best strength quality after analysis using the Finite Element Analysis (FEA) method?.

2. Method

2.1. Types of Research

The type of research used is Research and Development (R&D) research. In the study, the researcher used a descriptive method by taking a quantitative approach aimed at describing the properties of an object when simulating loading and knowing the causes of a certain symptom [8]. In descriptive research, the method used is content analysis, where the researcher collects data and information through the results of tests that have been carried out [9]. The researcher conducted a simulation analysis on the chassis design that had been developed using the help of Solidworks and Ansys applications. Research needs to be conducted to obtain the values of bending stiffnes and torsional stiffness that have the best strength values, which include the results of deformation values, von mises tensions, and safety factors.

2.2. Tools and Materials

In conducting research on the development of urban car chassis, Garuda UNY Team used tools such as laptops with Asus TUF Gaming FX505GD brand specifications, Intel Core i7-8750H @2.20 GHz processor, Memory with 16GB DDR4-2666MHz RAM, NVIDIA GeForce GTX 1050 4GB GDDR5 VGA, and Windows 11 Home Single Language OS 64 bit. Prepare the Solidworks 2022 application, and the Ansys Workbench 2022 R1 application.

The material used in the research on the chassis development of Garuda UNY Team Urban Cars is based on the Finite Element Analysis method, namely chassis design. There are three variations of the new design that will be simulated to see the results that have the best strength with the initial chassis design as a reference in data collection. Chassis design can be seen in Figure 1.

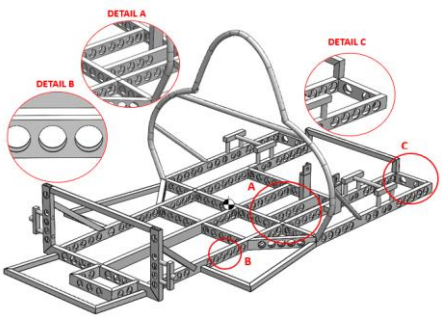

Initial Chassis

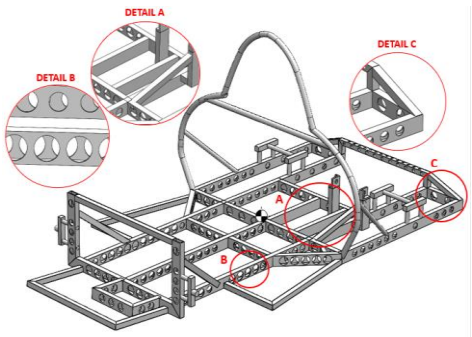

Chassis A

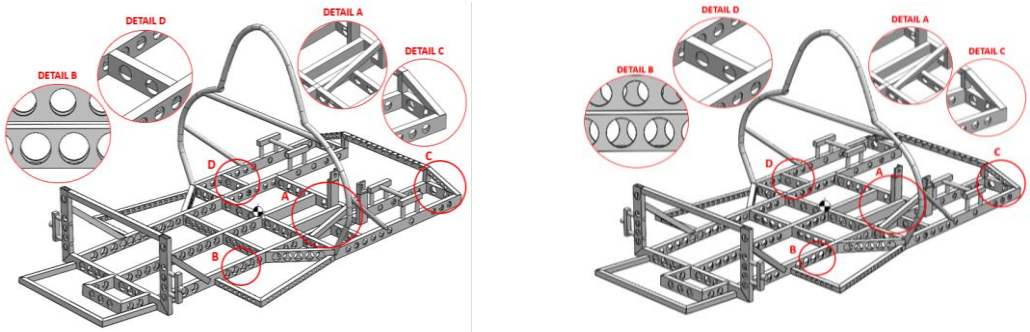

Chassis B **Chassis C**

Figure 1. Chassis Design

Details of the differences in the design of the chassis design variations can be seen in the pictures presented in Figure 1. In the design of the chassis, the detailed picture shows that the hollow is still given a hole and there has been no reinforcement from the transmission system mount. Then, the distance from the placement of the hole in the hollow cross-section is made linear or parallel as in detail image b, and at the back of the wheel mount has not been given construction reinforcement as in detail figure c.

In chassis design A, detailed image a shows that the hollow has not been given a hole and the transmission system seat has been strengthened. This is because this part is a critical point of the chassis so it needs to be strengthened, because it receives a considerable torque load from the engine system and powertrain system. Then, the distance from the placement of the holes in the hollow cross-section is made non-linear or or not in the direction of a straight line as in detail figure b. On the back of the wheel mount is given construction reinforcement as in detail image c.

In chassis B design, the design of the chassis design is almost the same as the chassis A design, the difference is in the placement of holes in the hollow cross-section, where the distance from the holes is made a liner or in the direction of a straight line as in detail image b. In addition, on chassis B there is also reinforcement on the front of the rear wheel mount as shown in detail image d. This aims to reduce the deformation and torsional load that may occur.

In chassis C design, the design of the chassis design is almost the same as the design of chassis B, the difference is in the provision of hollow cross-sectional holes, where the distance from the holes is made non-liner or or not in the direction of a straight line as in detail image b.

2.3. Subjects and Objects

The subject of this study is the chassis design design of the Garuda UNY Team Urban Car. Meanwhile, the object of this study is the value of von mises voltage, deformation, and safety factors that occur in the chassis design structure.

2.4. Research Variables

In conducting chassis development research, it is important to identify the variables to be simulated. The variables chosen must be relevant to the problem faced and achieve the goals to be achieved in the research. The variables used in the study consisted of free, bound and control variables.

Independent variables are used as directional determinants of certain changes in independent variables [9]. The free variable in this study is static loading or static structural simulation to obtain bending force values and torsional force values in the chassis design of Garuda UNY Team Urban Cars.

Bound variables are the influence of independent variables [9]. The bound variables in this study are in the form of the results of bending and torsional simulations , namely von misses stress values, deformation values, safety factor values, bending stiffness strength values, and torsional stiffness strength values in the chassis design of Garuda UNY Team Urban Cars.

The control variable is a variable that affects the bound variable, but the effect is controlled by controlling the effect [9]. The control variable in this study is the material used in the Garuda UNY Team Urban Car chassis, namely Aluminum 6063-T6.

2.5. Research Flow Diagram

The research process on the development of Garuda UNY Team car chassis is carried out by following the steps following the research flow chart as shown in Figure 2 below.

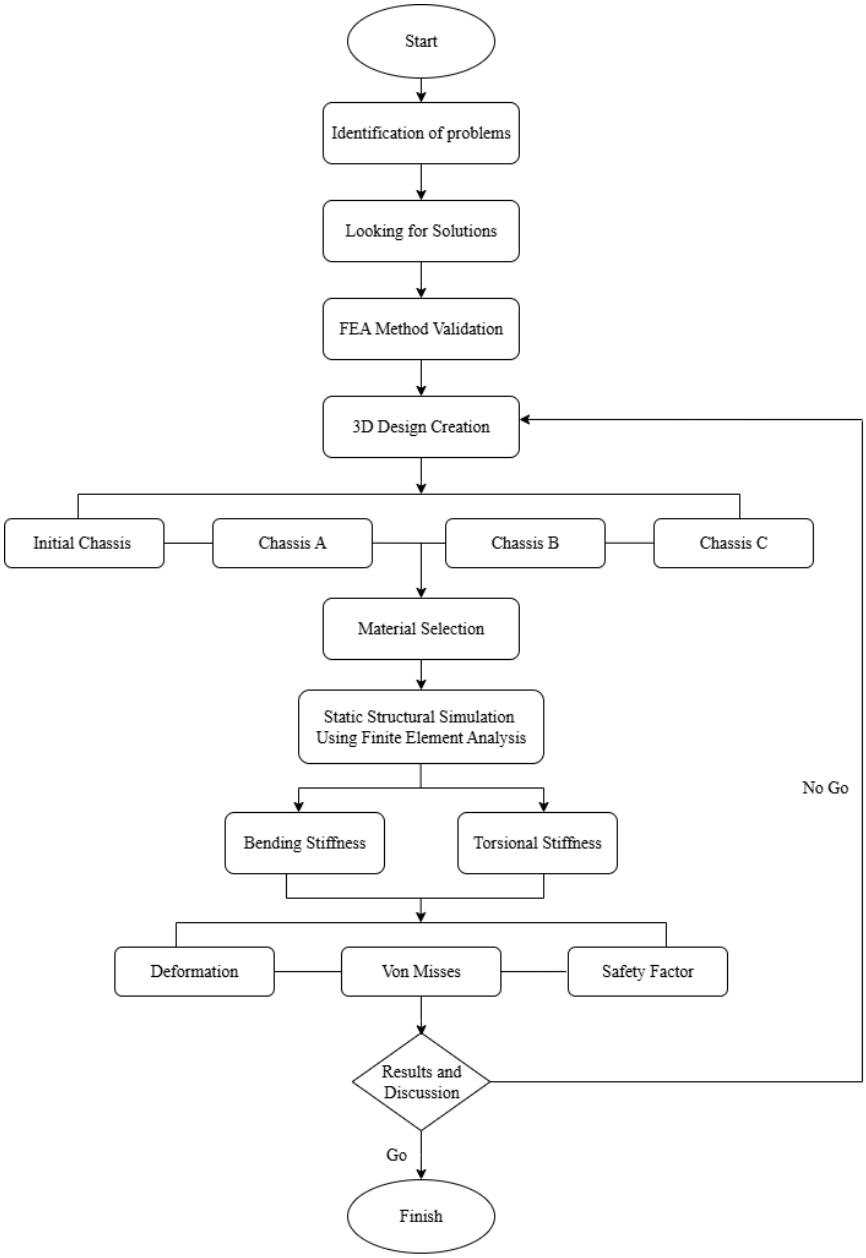

Figure 2. Research flow chart flowchart

2.6. Research Procedure

The procedure of this research began with Pre-Processing of data validation simulation. Numerical simulation was carried out using the Ansys Workbench 2022 R1 application. Before the simulation is carried out, we need to prepare the chassis design that has been designed using the Solidworks 2020 application. After the design process, the step is to export it into a STEP file format so that analysis can be carried out using the Ansys application.

Next is Convergence Mesh. This simulation analysis involves variations in the size of the elements in the mesh to identify the optimal element size [10]. During the simulation of the mesh with different element sizes, there was no significant change in the deformation value. The type of element used is the tetrahedrons method with variations in element size of 5, 5.5, 6, 6.5, 7, 7.5, 8, 8.5, 9, 9.5, 10 with millimeters. The use of the tetrahedrons method in simulations is because the tetrahedrons method has a good ability to adapt to complex geometric shapes, including sharp corners and curved surfaces [11]. The results of the mesh convergence simulation on the chassis design for the bending stiffness analysis are shown in Table 1 and Figure 3 below.

Table 1. Mesh convergence results in bending simulations

No	Element size (mm)	Tip Deflection (mm)
1	10	0.3649
2	9.5	0.3720
3	9	0.3951
4	8.5	0.4302
5	8	0.4600
6	7.5	0.4284
7	7	0.4274
8	6.5	0.4292
9	6	0.4560
10	5.5	0.4460
11	5	0.4439

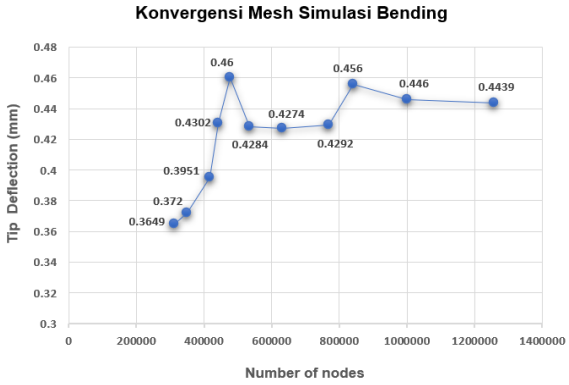

Figure 3. Mesh convergence results in bending simulations

In the simulation results to perform bending stiffness analysis, it can be concluded that adequate stability is found in the mesh size range between 7 mm to 7.5 mm. Therefore, it was decided to use a mesh size of 7.5 mm in the simulation of the Finite Elements Analysis method. Then, the results of the simulation to perform torsional stiffness analysis, it can be concluded that adequate stability is found in the mesh size range between 8.5 mm to 9 mm. Therefore, it was decided to use a mesh size of 9 mm. For more details, you can see Table 2 and Figure 4 below.

Table 2. Mesh convergence results in torsional simulations

No	Element size (mm)	Tip Deflection (mm)
1	10	2.9632
2	9.5	3.1061
3	9	3.1565
4	8.5	3.1590
5	8	3.1759
6	7.5	3.2111
7	7	3.2344
8	6.5	3.2656
9	6	3.2787
10	5.5	3.2949
11	5	3.3058

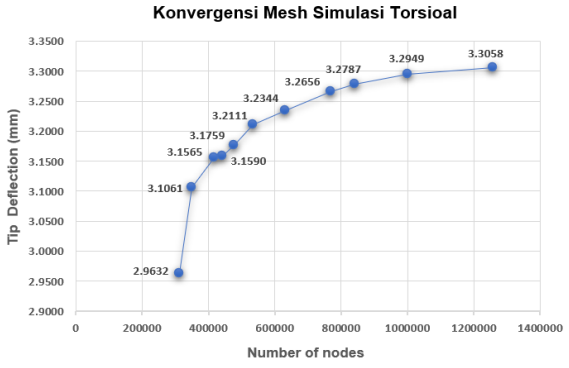

Figure 4. Mesh convergence results in torsional simulations

The next research procedure is the simulation of the Finite Element Analysis method which is carried out using the help of the Ansys 2022 R1 application. The load in the bending simulation was applied 750 N which was applied to the driver's compartment area and 200 N was applied to the engine compartment and powertrain system area [12]. Then, in the torsional simulation, a load of 225.24 N is applied to both parts of the front wheel with opposite forces. With the output results obtained in the form of von mises voltage values, deformation, and safety factors.

The data analysis technique in this study is to use the analytical descriptive analysis method. Descriptive analysis is a type of mathematical analysis that is used to analyze data without intending to draw conclusions that are universally applicable. Data obtained from simulation analysis based on the Finite Element Analysis (FEA) method using the Ansys Workbench 2022 R1 application obtained results in the form of von mises stress, deformation, safety factor, bending stiffness strength value and torsional strength stiffness value [13].

3. Results and Discussion

3.1. Deformation Value Results

Based on Figure 5, the results of the bending simulation on the initial chassis resulted in a maximum deformation of 0.428 mm and a deformation at the center of load point of 0.363 mm. Based on mathematical calculations, the permissible bending deformation value is 4.242 mm. The total value of deformation on the initial chassis according to the mathematical calculation was 0.000259 mm. The deformation value of the vehicle chassis does not exceed the permissible deformation value, so the chassis is still safe when receiving vertical loading [14].

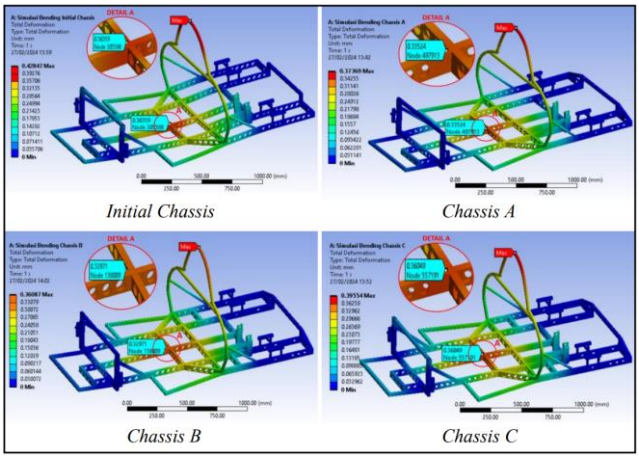

Figure 5. Deformation value results in bending simulation

The results of the bending simulation on chassis A resulted in a maximum deformation of 0.373 mm and a deformation at the center of load of 0.335 mm. The allowable bending deformation value is 4.242 mm, while the total deformation value on chassis A according to the mathematical calculation is 0.000239 mm. The deformation value of the vehicle chassis does not exceed the permissible deformation value, so the chassis is still safe when receiving vertical loading.

The results of the bending simulation on chassis B resulted in a maximum deformation of 0.360 mm and a deformation at the center of the load point of 0.329 mm. The permissible bending deformation value is 4.242 mm, while the total deformation value on chassis B according to the corresponding mathematical calculation is 0.000235 mm. The deformation value of the vehicle chassis does not exceed the permissible deformation value, so the chassis is still safe when receiving vertical loading.

The results of the bending simulation on chassis C resulted in a maximum deformation of 0.395 mm and a deformation at the center of the load point of 0.360 mm. The permissible bending deformation value is 4.242 mm, while the total deformation value on chassis C according to the mathematical calculation is 0.000257 mm. The deformation value of the vehicle chassis does not exceed the permissible deformation value, so the chassis is still safe when receiving vertical loading.

Then, the results of the torsional simulation deformation values of all chassis design variations can be seen in Figure 6 below. The maximum deformation value is within the permissible limit if the magnitude is no more than 25 mm in all directions [15].

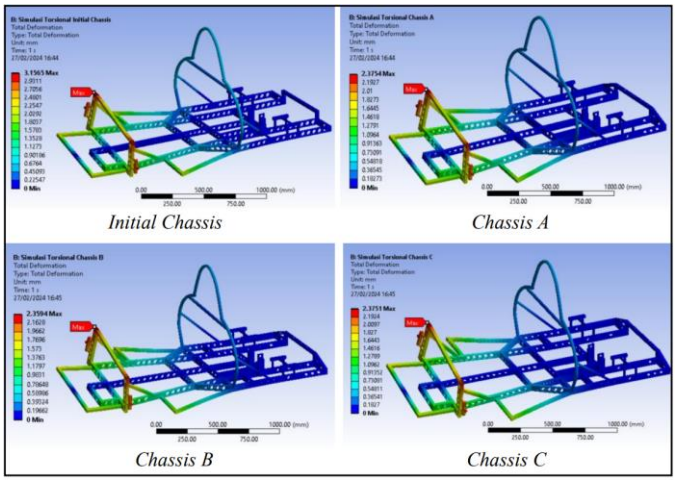

Figure 6. Results of deformation values in torsional simulations

From Figure 6 above, the results of torsional simulation on the initial chassis resulted in a maximum deformation of 3,156 mm located in the front wheel support area marked in red. The deformation value is very safe, because it is still very far from the minimum allowable deformation value of 25 mm. The results of torsional simulation on the initial chassis were used to perform torsional stiffness calculations.

The results of torsional simulation on chassis A resulted in a maximum deformation value of 2,375 mm located in the front wheel support area marked in red. The deformation value is very safe, because it is still very far from the minimum allowable deformation value of 25 mm.

The results of the torsional simulation on chassis B resulted in a maximum deformation value of 2,359 mm located in the front wheel support area marked in red. The deformation value is very safe, because it is still very far from the minimum allowable deformation value of 25 mm.

The results of the torsional simulation on chassis C resulted in a maximum deformation value of 2,375 mm located in the front wheel support area marked in red. The deformation value is very safe, because it is still very far from the minimum allowable deformation value of 25 mm.

3.2. Value Results of Von Misses Voltage

Based on Figure 7, the results of the bending simulation on the initial chassis resulted in a maximum von misses voltage value of 20.728 MPa, which is located in the hollow cross-section hole on the front wheel mount. The results of the bending simulation on chassis A resulted in a maximum von misses voltage value of 16.062 MPa, which is located in the hollow cross-sectional hole on the main structure of the left chassis. The results of the bending simulation on chassis B resulted in a maximum von misses voltage value of 15.791 MPa, which is located in the hollow cross-sectional hole on the main structure of the left chassis. The results of the bending simulation on chassis C resulted in a maximum von misses voltage value of 19,950 MPa, which is located in the hollow cross-section hole on the front wheel mount.

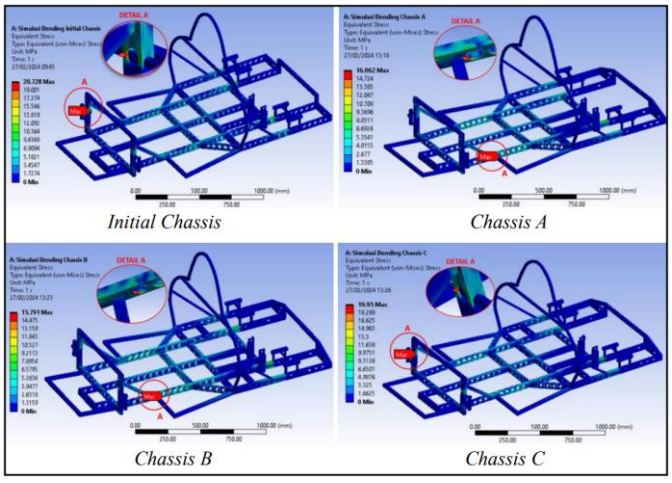

Figure 7. Results of von misses voltage values in bending simulation

Then, the results of the torsional simulation von misses tension values of all chassis design variations can be seen in Figure 8 below.

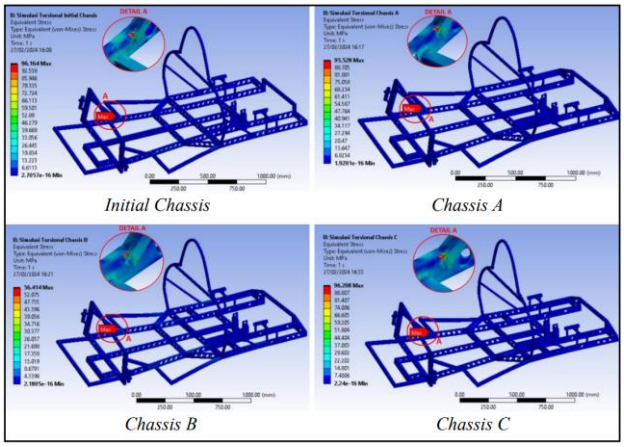

Figure 8. Results of von misses voltage values in torsional simulations

From Figure 8 above, the results of the torsional simulation on the initial chassis resulted in a maximum von misses voltage value of 96.164 MPa, which is located at the bonded contact point support point between the front hoop and the main chassis on the right. The results of torsional simulation on chassis A resulted in a maximum von misses voltage value of 95.528 MPa, which is located at the bonded contact point support point connection between the front hoop and the main chassis on the right. The results of torsional simulation on chassis B resulted in a maximum von misses voltage value of 56.414 MPa, which is located at the bonded contact point support point between the front hoop and the main chassis on the right. The results of torsional simulation on chassis C resulted in a maximum von misses voltage value of 96.208 MPa, which is located at the bonded contact point support point between the front hoop and the main chassis on the right.

3.3. Safety Factor Value Results

The results of the safety factor values of the bending simulation of all chassis design variations can be seen in Figure 9 below.

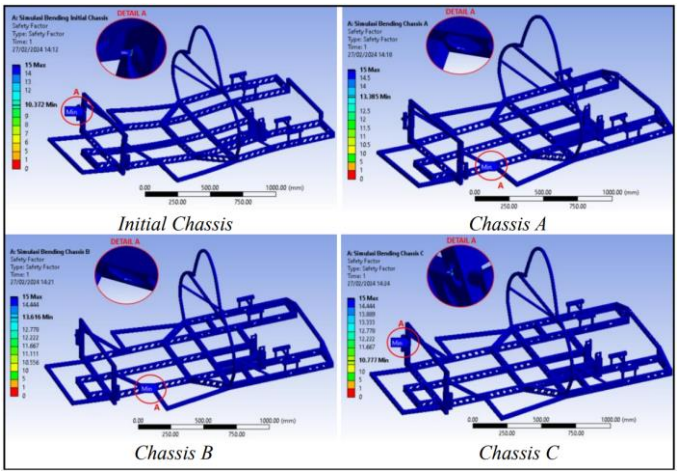

Figure 9. Results of safety factor values in bending simulation

From Figure 9 above, the results of the bending simulation on the initial chassis, a safety factor value of 10.372 was produced, where this number was already in the very safe category because it was above the number 3 as the limit of the value of the specified safety number. The validity of the safety factor in the bending simulation mathematically can be calculated according to the formula in Equation 1 as follows.

$$SF = \frac{Sy}{Py} \quad (1)$$

$$SF = \frac{215}{20.728}$$

$$SF = 10.372$$

The calculation results mathematically show the same safety factor value as the safety factor results in the simulation carried out with the ansys application. The results of the analysis of the bending simulation on chassis A, a safety factor value of 13.385 was produced, where this number was classified as very safe because it was above the number 3 as the limit of the value of the specified safety number. The results of the analysis of the bending simulation on chassis B, produced a safety factor value of 13,616 where this number has been included in the very safe category because it is above the number 3 as the limit of the value of the specified safety number. The results of the bending simulation analysis on chassis C resulted in a safety factor value of 10.777 where this number is already in the very safe category because it is above the number 3 as the limit of the value of the specified safety number. Then, the results of the torsional simulation safety factor values of all chassis design variations can be seen in Figure 10 below.

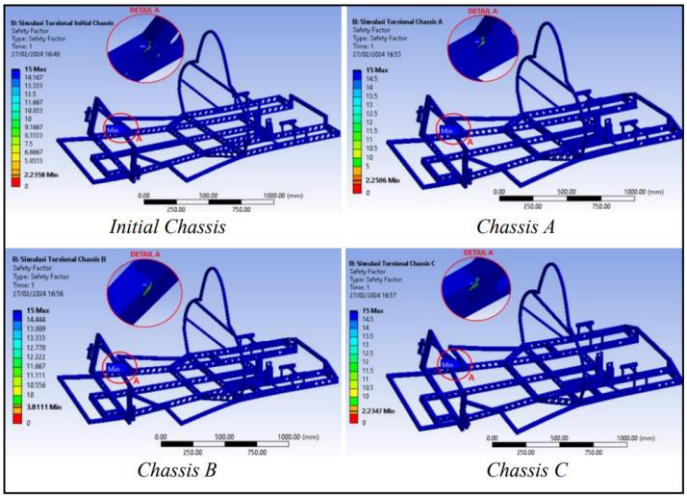

Figure 10. Safety factor value results in torsional simulation

From Figure 10 above, the results of the torsional simulation on the initial chassis, a safety factor value of 2.235 was produced, where the result of this number was already in the safe category because it was above 2 as the limit of the value of the specified safety number. The results of the calculation of the validity of the safety factor in the torsional simulation are mathematically calculated according to Equation 2 as follows.

$$SF = \frac{Sy}{Py} \quad (2)$$

$$SF = \frac{215}{96.164}$$

$$SF = 2.235$$

The calculation results mathematically show the same safety factor value as the safety factor results in the simulation carried out with the ansys application. The results of the torsional simulation analysis on the initial chassis resulted in a safety factor value of 2.235 where this number is already in the safe category because it is above 2 as the limit value of the specified safety number. The results of the torsional simulation analysis on chassis A, produced a safety factor value of 2,250 where this number is already in the safe category because it is above the number 2 as the limit value of the specified safety number. The results of the torsional simulation analysis on chassis B resulted in a safety factor value of 3.811 where this number is already in the safe category because it is above the number 2 as the limit value of the specified safety number. The results of the torsional simulation analysis on chassis C, produced a safety factor value of 2.234 where this number is already in the safe category because it is above 2 as the limit value of the specified safety number.

3.4. Results of Bending Stiffness and Torsional Stiffness Values

In looking for the value of bending stiffness and torsional stiffness on the initial chassis, it is taken from the magnitude of deformation at the driver's [16] center point, which is 0.363 mm. The calculation of the value of bending stiffness strength refers to the mathematical formula in Equation 3 as follows. Where K shows the bending stiffness strength, p shows the force, and w shows the deflection value.

$$K = \frac{P}{W} \quad (3)$$

$$SF = \frac{1090\ N}{0.363}$$

K = 3.002,754 N/mm

K = 3.002 KN/mm

In looking for the value of torsional stiffness force referring to the mathematical formula in Equation 4 as follows. Where Θ is the angular deflection value, y shows the deformation value, ht shows the halftrack of the vehicle, τ shows torsional rigidity, and T shows the torque load (Equation 5).

$$\emptyset = \frac{y}{ht} \quad (4)$$

$$\emptyset = \frac{3,156}{505}$$

$$\emptyset = 0,0062$$

$$\tau = \frac{T}{\emptyset} \quad (5)$$

$$\tau = \frac{225,24}{0,0062}$$

τ = 36.329,032 Nm/rad

τ = 634.061 Nm/deg

From the results of the calculation above, the value of bending stiffness in the initial design was 3.002 KN/mm and the value of torsional stiffness in the initial design was 634,061 Nm/rad. Then the same calculation was carried out on 3 variations of chassis design. On chassis A, the value of bending stiffness force is 3.253 KN/mm and the value of torsional strength of stiffness on chassis A is 836.42 Nm/rad. On chassis B, the value of bending stiffness force is 3.313 KN/mm and the torsional strength value of stiffness on chassis B is 855.211 Nm/rad. On chassis C, the value of bending force stiffness is 3.027 KN/mm and the value of torsional force of stiffness on chassis C is 836.4 Nm/rad.

3.5. Research Discussion

3.5.1. Discussion of Deformation Values

In the bending simulation, the smallest deformation value was in the chassis variation A and the chassis variation with a value of 0.329 mm which had a value difference of 9.3% from the initial chassis. The value of deformation in the bending simulation is shown in Table 3.

Table 3. Deformation values in bending simulations

No	Chassis Type	Result	
		Deformation at the Center Point (mm)	Difference (%)
1	Initial Chassis	0.363	0
2	Chassis A	0.335	7.7
3	Chassis B	0.329	9.3
4	Chassis C	0.360	0.8

In torsional simulations, the smallest deformation value was in chassis B variation with a value of 2,359 mm which had a value difference of 25.2% from the initial chassis. The deformation values in the torsional simulation are shown in Table 4.

Table 4. Deformation values in torsional simulations

No	Chassis Type	Result	
		Deformation (mm)	Difference (%)
1	Initial Chassis	3.156	0
2	Chassis A	2.375	24.7
3	Chassis B	2.359	25.2
4	Chassis C	2.375	24.7

3.5.2. Discussion of the Value of the Von Mises Voltage

In the bending simulation, the smallest von misses voltage value was in chassis B variation with a value of 15.791MPa which had a value difference of 23.8% from the initial chassis. The value of von mises stress in the bending simulation is shown in Table 5.

Table 5. Value of von mises voltage in bending simulation

No	Chassis Types	Result	
		Von misses voltage (MPa)	Difference (%)
1	Initial Chassis	20.728	0
2	Chassis A	16.062	22.5
3	Chassis B	15.791	23.8
4	Chassis C	19.950	3.8

In the torsional simulation that has been carried out, the smallest voltage value of von misses is in the variation of chassis B with a value of 56.414 MPa which has a value difference of 41.3% from the initial chassis. The value of von mises tension in the torsional simulation of each chassis type is shown in Table 6.

Table 6. Value of von mises tension in torsional simulations

No	Chassis Types	Result	
		Von misses voltage (MPa)	Difference (%)
1	Initial Chassis	96.164	0
2	Chassis A	95.528	0.66
3	Chassis B	56.414	41.3
4	Chassis C	96.208	-0.45

3.5.3. Discussion of Safety Factor Values

In the bending simulation, the largest safety factor value was in the B chassis variation with a value of 13.358 which had a value difference of 31.2% from the initial chassis. The value of the safety factor in the bending simulation is shown in Table 7.

Table 7. Safety factor value in the bending simulation

No	Chassis Types	Result	
		Safety Factor	Difference (%)
1	Initial Chassis	10.372	0
2	Chassis A	13.385	29
3	Chassis B	13.616	31.2
4	Chassis C	10.777	3.9

In the torsional simulation that has been carried out, the largest safety factor value is in the B chassis variation with a value of 3,811 which has a value difference of 40.6% from the initial chassis. The value of the safety factor in the torsional simulation is shown in Table 8.

Table 8. Safety factor values in torsional simulations

No	Chassis Types	Result	
		Safety Factor	Increase (%)
1	Initial Chassis	2.235	0
2	Chassis A	2.250	0.66
3	Chassis B	3.811	40.6
4	Chassis C	2.235	0

3.5.4. Discussion of the results of bending stiffness and torsional stiffness values

From the simulation analysis of the three chassis design variations, the largest bending stiffness value was in chassis design variation B with a value of 3.313 KN/mm, which had a value difference of 10.3% from the initial chassis. A comparison of the simulated values of bending stiffness is shown in Table 9. Then, for the largest torsional stiffness value is in the variation of chassis design B with a value of 854.5 Nm/deg, which has a value difference of 24.7% from the initial chassis. A comparison of the simulated values of torsional stiffness is shown in Table 10.

Table 9. Simulated value of bending stiffness

No	Chassis Types	Result	
		Bending Stiffness (KN/mm)	Difference (%)
1	Initial Chassis	3.002	0
2	Chassis A	3.253	8.4
3	Chassis B	3.313	10.3
4	Chassis C	3.027	0.8

Table 10. Torsional stiffness simulation value

No	Chassis Types	Result	
		Torsional Stiffness (Nm/deg)	Difference (%)
1	Initial Chassis	634.06	0
2	Chassis A	836.4	31.9
3	Chassis B	854.5	34.7
4	Chassis C	836.4	31.9

3.5.5. Discussion of chassis design construction results

Chassis development in the research focused on optimizing chassis design. In the study, the analysis simulation was more focused on analyzing the strength of the boring of the hollow cross-section of the main chassis structure. In addition, the research is also focused on analyzing the reinforcement of chassis design construction. The results of the strength value of the research that has been carried out can be seen in Figure 11 below.

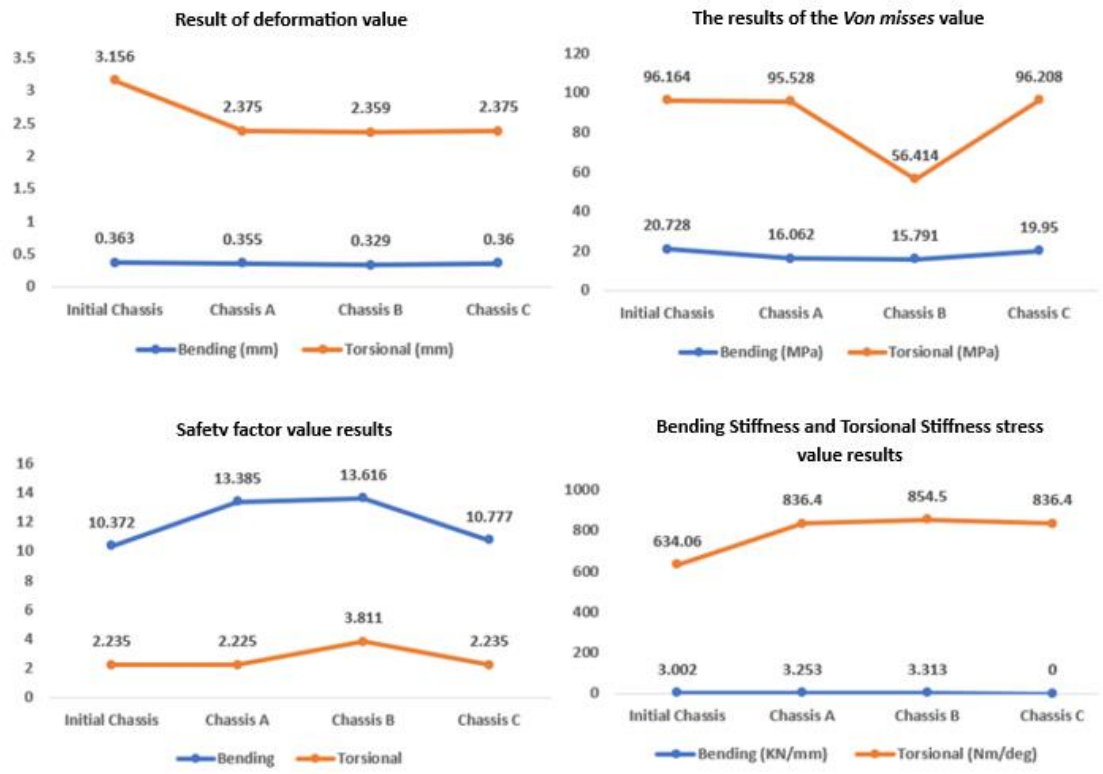

Figure 11. Graph of strength values of chassis design variations

Looking at the graph presented in Figure 11 above, it shows that the chassis design variations A, B, and C have decreased deformation values and von misses voltage values. Meanwhile, the value of the safety factor, bending stiffness value and torsional stiffness has increased when compared to the initial chassis. From the results of the simulation carried out, the provision of holes in hollow cross-sections that are made linear or unidirectional has a smaller deformation value when compared to the provision of holes in hollow cross-sections that are made non-linear [17]. This result can be seen in the variation of chassis B design where the holes in the hollow cross-section are made linear. For details of giving holes, you can see the picture that has been presented above. In addition, the provision of reinforcement to the chassis construction is very influential in increasing the strength value of the chassis [18].

4. Conclusion

Based on the results of the research and discussion, the research conducted in the development of the Garuda UNY Team Urban Car chassis based on the Finite Element Analysis (FEA) method using the Ansys application can be concluded:

The bending simulation analysis showed the smallest deformation value on chassis B (0.329 mm), followed by chassis A (0.335 mm), chassis C (0.360 mm), and initial chassis (0.363 mm). Then, in the torsional simulation analysis, the smallest deformation value was shown in chassis B (2.359 mm), followed by chassis A (2.375 mm), chassis C (2.375 mm), and initial chassis (3.156 mm).

The bending simulation analysis showed the smallest von misses voltage value on chassis B (15,791 MPa), followed by chassis A (16.062 MPa), chassis C (19.950 MPa), and initial chassis (20.728 MPa). Then, in the torsional simulation analysis, the smallest von misses voltage value was shown on chassis B (56.414 MPa), followed by chassis A (95.528 MPa), chassis C (96.208 MPa), and initial design (96.164 MPa).

The analysis of the bending simulation showed the greatest safety factor value on chassis B (13.616), followed by chassis A (13.385), chassis C (10.777), and initial chassis (10.372). Then, in the torsional simulation analysis, the greatest safety factor value was shown on chassis B (3.811), followed by chassis A (2.250), chassis C (2.235), and initial chassis (2.235).

The analysis of the calculation of the bending stiffness simulation was greatest on chassis B (3,313 KN/mm), followed by chassis A (3.253 KN/mm), chassis C (3.027 KN/mm), and initial chassis (3.002 KN/mm). Then, in the analysis of the calculation of torsional stiffness, the most stiffness was on chassis B (854.5 Nm/sec), followed by chassis A (836.4 Nm/deg), chassis C (836.4 Nm/deg), and initial chassis (634.06 Nm/deg).

From the results of the study, the variety of chassis B design has the best strength compared to chassis A and chassis C, so chassis design B is determined as the best chassis design design in the Garuda UNY Team Urban Car chassis development research.

Author Contributions

All authors have equal contributions to the paper. All the authors have read and approved the final manuscript.

Funding

No funding support was received.

Declaration of Conflicting Interests

The author declared no potential conflicts of interest with respect to the research, authorship, and/ or publication of this article.

Data Availability

The datasets generated during and/ or analysed during the current study are available from the corresponding author on reasonable request.

References

[1] A. T. Arrang, U. Kristen, I. Toraja, S. Gusty, and R. M. Rachman, *Mobilitas Berkelanjutan (Mobil Listrik di Era Society 5 . 0)*, no. May 2025. 2024.

[2] P. Ramelia *et al.*, "Ketergantungan Terhadap Kendaraan Pribadi Di Kota Pontianak Kalimantan Barat," *J. Tek. PWK*, vol. 4, no. 1, p. 2015, 2015, [Online]. Available: http://ejournal-s1.undip.ac.id/index.php/pwk

[3] F. M. Huda, S. Anis, M. B. Laroybafih, and D. F. Fitriyana, "Rancang Bangun Dog Clutch Transmission System Pada Kendaraan Mobil Hemat Energi Urate Evo-7 Pandawa Team," vol. 10, no. 2, 2025.

[4] A. Fadila and S. Bustami, "Analisis Simulasi Struktur Chassis Mobil Mesin Usu Berbahan Besi Struktur Terhadap Beban Statik," *J. e-dinamis*, vol. 6, no. 2, pp. 70–79, 2013.

[5] M. F. Adhim, "ANALISIS STRUKTURAL PERFORMA CHASSIS SAPUANGIN SPEED 2013 STRUCTURAL PERFORMANCE ANALYSIS FOR 2013 SAPUANGIN SPEED CHASSIS," 2014.

[6] D. L. Arisendi, "PERHITUNGAN ULANG CHASSIS MOBIL NOGOGENI 3 EVO UNTUK SHELL ECO MARATHON ASIA 2017 CHASSIS MOBIL NOGOGENI 3 EVO UNTUK SHELL ECO MARATHON," 2017.

[7] T. Shantika, E. T. Firmansjah, and I. Naufan, "PERANCANGAN CHASSIS TYPE TUBULAR SPACE FRAME UNTUK KENDARAAN LISTRIK," *Poros*, vol. 15, no. 1, pp. 9–17, 2017.

[8] Sugiyono, *Metode Penelitian Kuantitatif, Kualitatif, dan R&D*. Bandung: Alfabeta, 2016.

[9] M. Abdullah, *Metodologi Penelitian Kuantitatif*. Aswaja Pressindo, Yogyakarta, 2015.

[10] R. Ismail and F. A. Sitanggang, "Analisis Kekuatan Struktur Wereable Elbow Exoskeleton untuk Penderita Kelumpuhan Gerak Siku Menggunakan Finite Element Method (FEM)," *Rotasi*, vol. 21, no. 3, pp. 193–199, 2019.

[11] P. Febrianto, M. G. Muzakki, and A. Sastranegara, "Studi Komparatif Mesh Hexahedral dan Tetrahedral pada Analisis Statis Crane Hook dengan ANSYS," vol. 22, no. 1, pp. 63–76, 2024.

[12] Z. Aziri, E. Hristovska, Z. Angelevski, I. Kuzmanov, R. Pasic, and V. Jovanovska, "The verification of a redesigned part of a telescopic hydraulic cylinder based on finite element analysis," vol. 18, no. 1, pp. 31–41, 2021, doi: 10.9790/1684-1801033141.

[13] A. Majeed, M. Rachna, and E. Institutions, "" Ansys Software for Mechanical Engineering "," no. August, 2022, doi: 10.13140/RG.2.2.18076.97927.

[14] A. Anggry, *Kekuatan Bahan Tegangan dan Regangan pada Batang*. Politeknik Manufaktur Negeri Bangka Belitung, 2021.

[15] V. Francis, R. K. Rai, A. K. Singh, P. Kumar, and H. Yadav, "Structural Analysis of Ladder Chassis Frame for Jeep Using Ansys," vol. 4, pp. 41–47, 2014.

[16] B. Y. Wahyudi, B. Sudarmanta, and J. B. Ariatedja, "Analisa Torsional Rigidity dan Bending Stiffness pada Bus Elektrik PUI-SKO ITS Konversi ICE ke BEV dengan Variasi Cross Member," *J. Tek. ITS*, vol. 10, no. 2, pp. 303–310, 2021.

[17] M. Alaydrus, S. Nurlina, and C. Remayanti, "ANALISIS DEFORMASI STRUKTUR BALOK BETON BERTULANG DENGAN LUBANG HOLLOW CORE PADA TENGAH BALOK," *J. Mhs. Jur. Tek. Sipil Univ. Brawijaya,* vol. 1, no. 3, p. 1117, 2016.

[18] A. Kusumo and I. N. G. Suryadharma, "Analisa Kekuatan Chassis Mobil Menggunakan Material Paduan Aluminium Dan Magnesium," vol. 24, no. 2, pp. 29–42, 2021.