Design and analysis of the asphalt agitator shaft system in a bitumen mixer

Deva Akbar Ismail, Hammar Ilham Akbar*, Ganjar Pramudi, Firyal Najla Kayne

Universitas Sebelas Maret, Ir. Sutami Street No.36A, Surakarta, 57126, Indonesia
*Corresponding author, email: hammar_ilham@staff.uns.ac.id

Article history
Submitted: 26 June 2026
Revised: 27 July 2026
Accepted: 23 August 2026
Published: 25 August 2026

Keywords
Mechanical Engineering
Sebelas Maret University
Shaft
Vocational School

Abstract
This study designs the agitator shaft of a bitumen mixer machine used to blend asphalt with plastic waste as a reinforcing material for road pavement. The machine employs a 1 HP 3 Phase electric motor at 2500 rpm, a pulley and V-belt transmission system, and a mixing capacity of 1 kg of bitumen at 135℃ for 15 minutes. Shaft design was performed analytically using machine element theory, encompassing torque, bending moment, equivalent torque, and safety factor calculations. The results indicate that the upper shaft, made of St37 steel, requires a minimum diameter of Ø20.01 mm (adopted diameter: Ø25 mm) with an allowable shear stress of 69.38 N/mm², while the lower shaft, made of SS304 stainless steel, requires a minimum diameter of Ø4.77 mm (adopted diameter: Ø15 mm) with an allowable shear stress of 105.75 N/mm². The actual shear stress on both shafts was verified to fall below the allowable limit of their respective materials, confirming structural safety. Machine testing demonstrated that all components performed as designed, the bitumen and plastic powder mixture was uniformly homogeneous, and the crucible leakage problem was successfully resolved by adding a 20 mm flange, thus confirming that the machine is fit for operation.

1. Introduction

Bitumen is a black or dark colored adhesive material that exists in solid or semi-solid form; it can be obtained naturally or as a refined petroleum product. One of the most commonly used forms of bitumen is asphalt, which serves as the primary material in modern highway infrastructure construction [1]. The use of asphalt in infrastructure development continues to increase in line with economic growth and mobility needs in Indonesia. The quality of the asphalt used significantly determines the durability and service life of road construction; therefore, the production and mixing processes must adhere to appropriate standards to ensure that the resulting pavement is of optimal quality [2].

As the demand for asphalt for infrastructure continues to rise, Indonesia also faces a major challenge in managing plastic waste. Indonesia ranks second as the world's largest contributor of plastic waste, with an annual total of 8.96 million metric tons [3]. Data from the National Waste Management System for 2024 shows that total waste accumulation reached 36.660.477 metric tons, with approximately 67.59% not yet managed optimally. The problem of poorly managed plastic waste can pollute the environment and ecosystems, making innovative solutions necessary to process this waste into value added materials. One such innovation is the use of plastic waste as a reinforcing material in asphalt mixtures for road construction

Mixing plastic waste into asphalt bitumen has been shown to improve the mechanical properties of asphalt such as strength, stiffness, and resistance to high temperatures while also helping to reduce environmental pollution [4]. The mixing process between bitumen and plastic waste requires precise control of temperature and mixing speed to produce a homogeneous mixture. Asphalt mixing machines play a crucial role in maintaining the stability of the mixing temperature and ensuring that the plastic melts and is evenly distributed throughout the bitumen. The homogeneity of the resulting mixture affects the viscosity, adhesion, and final quality of the road pavement [5]. Therefore, asphalt mixing machines must be carefully designed to ensure the mixing process proceeds optimally and produces high-quality modified asphalt

A critical component in an asphalt mixing machine is the mixing shaft, which transmits rotational speed and torque from the drive motor to the mixing blades. This machine uses a 1 HP, 3-phase electric motor with a maximum speed of 2800 rpm and a pulley-belt transmission system to mix 2 kg of liquid asphalt at a temperature of 135℃ for 15 minutes. The mixing shaft must be able to withstand repetitive loads resulting from the mixing process of high-viscosity material, torsional torque from the power transmission, and high-temperature operating conditions. Failure of the shaft can cause machine damage and disrupt the production process.

© 2026 The Author(s)
This work is licensed under a Creative Commons Attribution-ShareAlike 4.0 International License
ISSN: 3110-1577

Accurate shaft design calculations are essential to ensure that the shaft operates safely and efficiently. Factors such as shaft diameter, material used, shear stress, bending stress, and shaft deflection must be carefully considered. An improperly designed shaft may experience failures such as fracture, excessive deformation, or excessive vibration, which can reduce the machine's service life [6]. Therefore, shaft strength analysis based on machine element theory and applicable engineering standards is crucial.

This final project report focuses on the calculations and design analysis of the shaft in an asphalt mixer (bitumen mixer). The calculations include determining the optimal shaft diameter, analyzing the stresses that occur, selecting the appropriate material, and evaluating the safety factor to ensure the shaft can operate reliably under the specified operating conditions. It is hoped that the results of this design will serve as a reference for the manufacture of efficient, safe, and durable asphalt mixers.

2. Method

2.1. Design Stages

The process flow for manufacturing a bitumen mixer is shown in Figure 1.

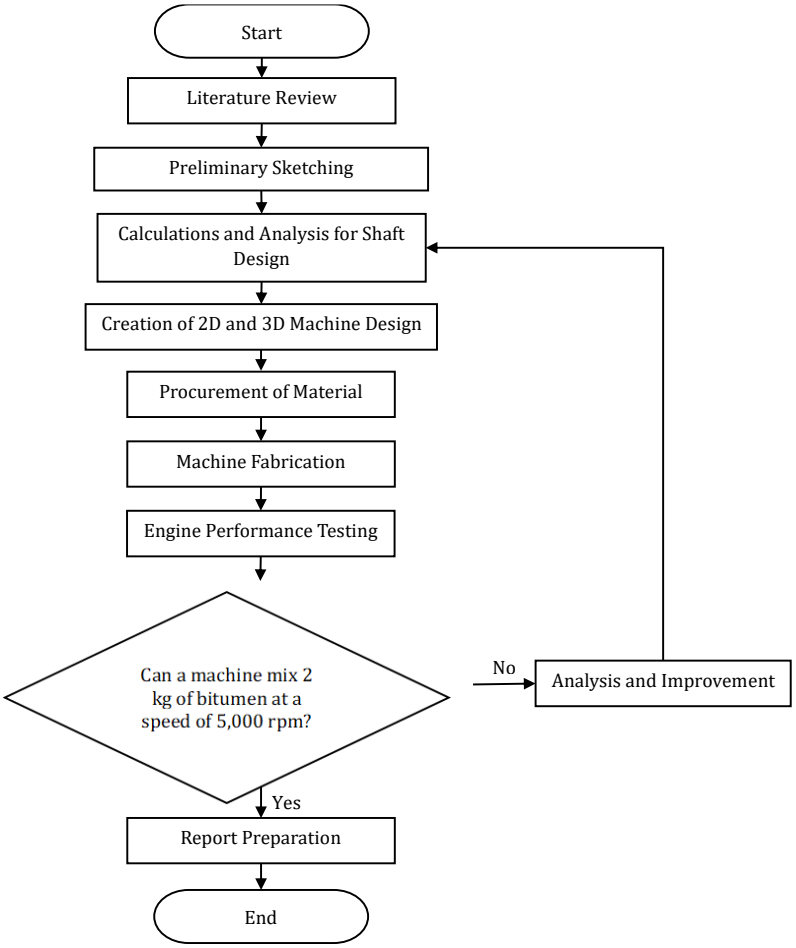

Figure 1. Flow Diagram Design Process

2.2. Literature Review

A bitumen mixer is a machine used in the process of mixing asphalt with aggregates or other reinforcing materials [7]. This bitumen mixer operates by stirring the asphalt using the rotation of a shaft, which is transmitted from the motor via a transmission system [8]. During the mixing process, an electric heating system is also activated to raise the temperature of the asphalt to the desired level.

2.3. Preliminary Sketching

The sketching process is based on data and information gathered during the project's initiation phase. The results of this sketching process will serve as a reference for creating 2D and 3D technical drawings later on.

© 2026 The Author(s)
This work is licensed under a Creative Commons Attribution-ShareAlike 4.0 International License
ISSN: 3110-1577

2.4. Shaft Design Calculations and Analysis.

Shaft design calculations aim to produce a shaft design suitable for an asphalt mixer. These calculations also aim to prevent unwanted failures or damage to the machine resulting from shaft design failures [9]. Shaft design calculations include several important parameters, namely the power transmitted by the shaft, the applied torque, the bending moment due to agitation loads, shear and bending stresses, the minimum shaft diameter, the maximum deflection, as well as material selection and safety factors [5]. The loads acting on the shaft consist of torsional and bending loads, which must be considered simultaneously using the concept of equivalent torque [16].

2.5. 2D and 3D Engineering Drawing

2D and 3D machine design drawings are created after specific guidelines are obtained from the sketching process and calculations performed earlier. The design drawings must be detailed and include dimensions for every part of the machine components depicted. The 2D and 3D designs of the bitumen mixer can be seen in Figure 2 and Figure 3.

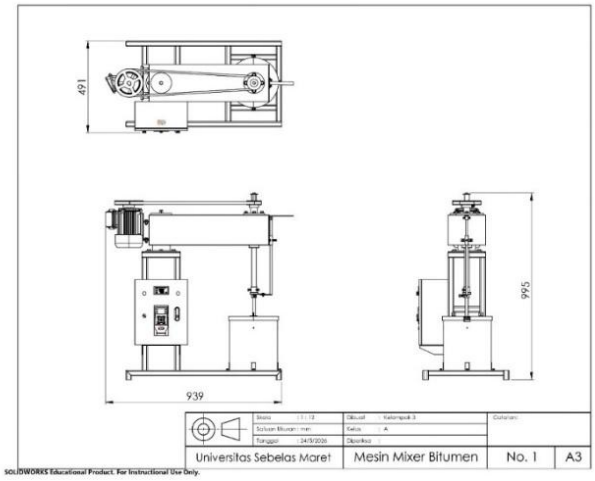

Figure 2. 2D Design of a Bitumen Mixer Machine

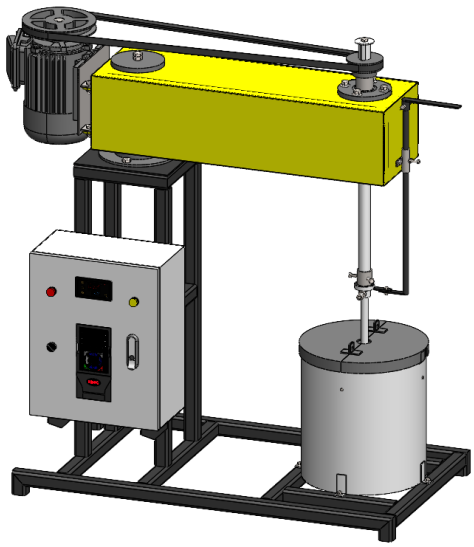

Figure 3. 3D Design of a Bitumen Mixer Machine

2.6. Procurements of Materials

Procurement is a systematic process carried out to obtain the goods or services required for a work plan [10]. In the process of procuring materials for this bitumen mixer, a Bill of Materials was created to support a structured and systematic procurement process. A Bill of Materials is a document containing information regarding a product's composition, including material specifications, material dimensions, and the quantities required in the production process of a product [11]; [15]. Therefore, the preparation of a Bill of Materials is necessary and important.

© 2026 The Author(s)
This work is licensed under a Creative Commons Attribution-ShareAlike 4.0 International License
ISSN: 3110-1577

2.7. Machine Assembly Process

The machine assembly process is carried out after all preparatory work such as sketches, technical drawings, and material preparation has been completed. This process must be carried out carefully and safely to prevent errors during production and avoid workplace accidents: procurement of materials; cutting of materials; machine fabrication; finishing [17].

2.8. Engine Performance Testing

Once the assembly process is complete, the engine undergoes testing. This process is conducted to determine whether the engine's performance is optimal and meets the target or not.

a. No-Load Testing: No-load testing is performed by starting the engine in an idle state (without load) to assess the engine's initial performance and the stability of its basic mechanical components, such as the engine, transmission system, bearings, and crankshaft.
b. Testing with a bitumen load without reinforcing material: Machine testing with a load of pure bitumen without reinforcing material is conducted by starting the machine with the mixing drum filled with pure bitumen. This test serves to determine the machine's ability to mix hot liquid bitumen. This process also evaluates the performance of the machine's heating system.
c. Testing process with a bitumen load containing reinforcing material: The machine testing process using a load of bitumen mixed with reinforcing material specifically plastic that has been processed into powder form is conducted by first adding pure liquid bitumen to the mixing drum, then adding the plastic powder mixture last, and finally starting the machine. This test simulates the machine's performance when it is later used with material that has been mixed with reinforcing agents.

2.9. Analysis and Repairs

After the testing process is complete, the machine's performance is analyzed. If the machine's performance is deemed suboptimal or does not meet the target, the process continues with repairs to improve the machine's condition and performance.

2.10. Report Preparation

All results from the design, assembly, and testing phases were documented in a scientific report. The report includes the background, literature review, design methodology, results and discussion, as well as conclusions and recommendations. This report was prepared in accordance with scientific writing guidelines and includes valid references and figures as technical evidence.

3. Results and Discussion

3.1. Calculating the Rated Power

To determine the rated power, first calculate the actual power and the power transmitted by determining the total torque which is the sum of the running torque and the starting torque when the engine is operating in Equation (1).

$$T_{total} = T_{running} + T_{\text{start}} \quad (1)$$

$$T_{total} = 0.0414\ Nm + 0.416\ Nm$$

$$T_{total} = 0.4574\ Nm$$

3.2. Calculation of Forces on the Stirrer Blade Shaft

Based on the calculations, the value of T_1 (the tight side of the belt) is 195.1 N, and the value of T_2 (the loose side of the belt) is 13.65 N. To determine the forces acting on the mixer blade shaft and the pulley, the following equations can be used:

Determining the Force a Stirring Blade (F_{knives}). Calculating the force on the mixing blade using the Equation (2):

$$W_{\text{knives}} = \frac{shaft\ mass}{number\ of\ blades} \times \text{gravity} \quad (2)$$

$$W_{\text{knives}} = \frac{2.26\ kg}{4} \times 9.81\ \text{m/s}^2 = 5.54\ \text{N}$$

Number of knives = 4

© 2026 The Author(s)
This work is licensed under a Creative Commons Attribution-ShareAlike 4.0 International License
ISSN: 3110-1577

$F_{knives} = (W_{pisau} \times 4 \text{ knives})$

$F_{knives} = (5.54 \text{ N} \times 4)$

$F_{knives} = 22.16 \text{ N}$

Determining the total weight force on the shaft ($F_{totalpores}$) can be seen in Equation (3)

$W_{transmission}$ = Shaft mass × gravity

$W_{transmission} = 2.03 \text{ kg} \times 9.81 \text{ m/s}^2 = 19.96 \text{ N}$

$F_{totalpores} = (W_{pknives} + W_{transmission})$ (3)

$F_{totalpores} = (5.54 \text{ N} + 19.96 \text{ N})$

$F_{totalpores} = 25.5 \text{ N}$

Determining the Force on the Pulley (F_{pulley}). The force on the pulley can be determined using the Equation (4)

$W_{pulley} = 2.5 \text{ kg} \times 9.81 \text{ m/s}^2 = 24.525 \text{ N}$

T_1 (the tight side of the belt) = 195.1 N

T_2 (loose side of the belt) = 13.65 N

$\alpha = \cos(0°) = 1$

$F_{pulley} = (T_1 + T_2) \times \alpha + W_{pulley}$ (4)

$F_{pulley} = (195.1 \text{ N} + 13.65 \text{ N}) \times 1 + 24.525 \text{ N}$

$F_{pulley} = 208.75 \text{ N} + 24.525 \text{ N}$

$F_{pulley} = 233.27 \text{ N}$

Once the forces acting on the pulley and the mixing blade are known, the structural statics diagram for the shaft can be seen in Figure 4 and Figure 5.

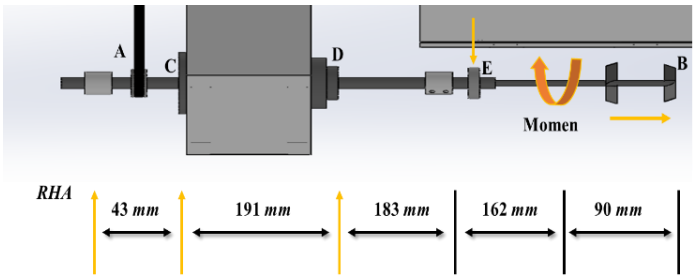

Figure 4. Axle Assembly

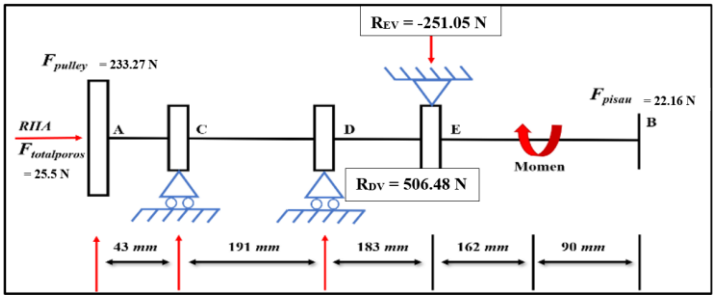

Figure 5. Structural Statics of Shafts

© 2026 The Author(s)
This work is licensed under a Creative Commons Attribution-ShareAlike 4.0 International License
ISSN: 3110-1577

3.3. Calculation of Force Equilibrium on a Shaft

After determining the structural statics in the vertical direction, the next step is to determine the vertical reaction forces, namely RDV and REV. The shaft is supported by three bearings at points C, D, and E, where the dominant reaction calculations are performed at points D and E as the primary supports. Point A is the free end with a load of F_{pulley} = 233.27 N, while the agitator blade load F_{blade} = 31.97 N acts on the right side of the shaft. The following are the steps to determine these reaction forces. Based on the force analysis in Figure 10, the following calculations can be performed.

Finding a stylistic direction R_{EV}

$$\sum M_D = 0$$

$$-(F_{pulley} \times 234) + (F_{knive} \times 390) - (R_{EV} \times 183) = 0$$

$$-(233.27 \times 234) + (22.16 \times 390) - (R_{EV} \times 183) = 0$$

$$-54585.18 + 8642.40 - (R_{EV} \times 183) = 0$$

$$-45942.78 = R_{EV} \times 183$$

$$R_{EV} = \frac{-45942.78}{183}$$

$$R_{EV} = -251.05 \text{ N}$$

Finding a stylistic direction R_{DV}

$$\sum F_y = 0$$

$$R_{DV} + R_{EV} - F_{pulley} - F_{knive} = 0$$

$$R_{DV} = F_{pulley} + F_{knive} - R_{EV}$$

$$R_{DV} = 233.27 + 22.16 - (-251.05)$$

$$R_{DV} = 506.48 \text{ N}$$

Finding aa stylistic direction R_{HA}

$$\sum F_X = 0$$

$$R_{HA} = F_{totalpores} + F_{knive}$$

$$R_{HA} = 25.5 + 22.16$$

$$R_{HA} = 47.66 \text{ N}$$

Once the values of the bending moment and shear force at each point have been determined, a Free Body Diagram (FBD), Shear Force Diagram (SFD), and Bending Moment Diagram (BMD) can be drawn for further analysis. Based on Figure 4.4, the NFD shows a constant normal force along the shaft of 22.16 N (tensile) due to the effect of Fpisau, which then returns to 0 N at the free end of the shaft (point B), in accordance with the free end boundary condition. In the SFD, the shear force changes sign at point D due to the reaction at support RDV, with the maximum sheer force of 273.21 N occurring in the D–E segment. Furthermore, the BMD diagram shows that the maximum bending moment occurs at point D, with a value of −54,585.18 Nmm; therefore, point D is designated as the critical point on the upper shaft (transmission).

Meanwhile, at the bottom of the shaft (point B1), the bending moment is −997.83 Nmm, which is then used as a reference for calculating the equivalent torque on the agitator shaft. The moment value at point B2, which is close to zero (−0.63 Nmm ≈ 0), confirms that the calculation of the equilibrium of forces and moments on the shaft is consistent and satisfies the free-end boundary conditions. The NFD, FBD, SFD, and BMD diagrams are shown in the Figure 6.

© 2026 The Author(s)
This work is licensed under a Creative Commons Attribution-ShareAlike 4.0 International License
ISSN: 3110-1577

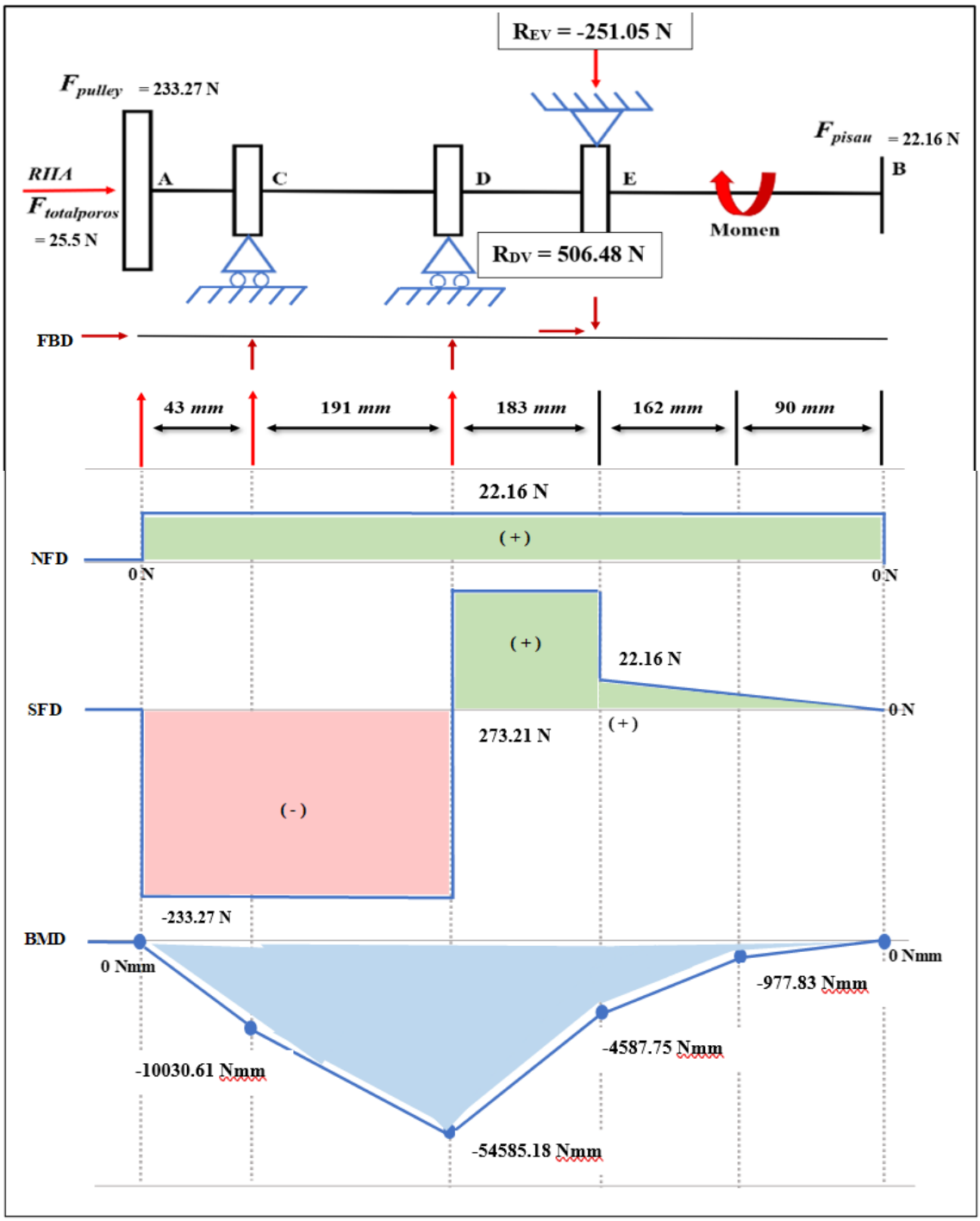

Figure 6. Diagram NFD, FBD, SFD, BMD

3.4. Calculation of the Diameter of the Transmission Shaft and the Agitator Shaft

The diameter of the agitator blade shaft is calculated using a two-stage shaft: the upper shaft is made of St37 steel with a diameter of 25 mm, and the lower shaft (agitator blade) is made of SS304 stainless steel with a diameter of 15 mm. To determine the shaft diameter, several parameters must be considered, including: shaft material, bending moment factor (Km), torsional moment factor (Kt), torque (T), and moment (M). The values of Km and Kt are taken from Table 2.2, "Correction Factors for Torsional and Bending Moments." When mixing bitumen, the shaft is subjected to sudden, shock-like loads; therefore, the values of Km and Kt are 2.

3.4.1. Transmission Shaft (St37 steel, 25 mm in diameter)

The calculation of the upper shaft diameter begins by calculating the torque acting on the shaft. The torque on the shaft can be determined using the parameters shown in Table 1.

© 2026 The Author(s)
This work is licensed under a Creative Commons Attribution-ShareAlike 4.0 International License
ISSN: 3110-1577

Table 1. Calculation of Torque on the Transmission Shaft

Parameter	Equation	Data	Result
Torque (T_{total})	$Ttotal = Trunning + T$start	Trunning = 0.0414 Nm Tstart = 0.416 Nm	457.4 Nm

After determining the torque on the shaft, the next step is to calculate the equivalent torque. The details of the equivalent torque calculation are shown in Table 2.

Table 2. Calculation of Equivalent Torque on the Transmission Shaft

Parameter	Equation	Data	Result
Equivalent Torque (Te)	Te = $\sqrt{(Km \times M)^2 + (Kt \times T)^2}$	T = 457.4 Nmm M = -54585.18 Nmm Km = 2 Kt = 2	109174.19 Nmm

The yield strength of St37 steel has a tensile strength of 185 MPa (DIN 17100 standard) and an Sf value of 2. Once the equivalent torque has been determined, the next step is to calculate the allowable shear stress of the material as presented in Table 3.

Table 3. Shear Strength of Transmission Shaft Material (St37 Steel)

Parameter	Equation	Data	Result
Shear strength of the material (τ)	$\tau = \frac{\sigma y \times 0.75}{Sf}$	σy = 185 N/mm² Sf = 2	69.38 N/mm²

After determining the equivalent torque and the allowable shear stress of the material, the next step is to calculate the minimum shaft diameter. The calculation of the upper shaft diameter is presented in Table 4.

Table 4. Calculation of the Transmission Shaft Diameter

Parameter	Equation	Data	Result
Diameter shaft (d)	$Te = \frac{\pi}{16} \times \tau \times d^3$	$Te = 109174.19\ Nmm$ $\tau = 69.38\ N/mm^2$	20.01 mm

After performing the calculations, the minimum diameter of the upper shaft was determined to be Ø20.01 mm. In the construction of the bitumen mixer, a drive shaft with a diameter of Ø25 mm was used. The use of a shaft with a diameter of Ø25 mm was intended to ensure a safety margin, accommodate the bearing diameter, and optimize mixing performance.

3.4.2. Lower Shaft of the Mixer (Material: SS304, diameter: 15 mm)

The calculation of the diameter of the lower shaft (stirring blade) uses SS304 stainless steel. The following is the torque calculation for the lower shaft shown in Table 5.

Table 5. Calculation of Torque on the Agitator Shaft

Parameter	Equation	Data	Result
Torque (T_{total})	$Ttotal = Trunning + T$start	Trunning = 0.0414 Nm Tstart = 0.416 Nm	457.4 Nm

After determining the torque on the agitator shaft, the next step is to calculate the equivalent torque using the bending moment at point B1. The details of the equivalent torque calculation are presented in Table 6.

Table 6. Calculation of Equivalent Torque for the Agitator Shaft

Parameter	Equation	Data	Result
Equivalent Torque (Te)	Te = $\sqrt{(Km \times M)^2 + (Kt \times T)^2}$	T = 457.4 Nmm M = 997.83 Nmm Km = 2 Kt = 2	2195.33 Nmm

The yield strength of SS304 stainless steel is 282 MPa (Material Test Certificate from Viraj Profiles Ltd., India), and its Sf value is 2. The calculation of the allowable shear stress for the material is presented in Table 7.

© 2026 The Author(s)
This work is licensed under a Creative Commons Attribution-ShareAlike 4.0 International License
ISSN: 3110-1577

Table 7. Shear Stress of Stirrer Shaft Material (SS304)

Parameter	Equation	Data	Result
Shear strength of the material (τ)	$\tau = \frac{\sigma y \times 0.75}{Sf}$	σy = 282 N/mm² Sf = 2	105.75 N/mm²

After determining the equivalent torque and the allowable shear stress of the lower shaft material, the minimum shaft diameter is then calculated. The calculation of the agitator shaft diameter is presented in Table 8.

Table 8. Calculation of the Agitator Shaft Diameter

Parameter	Equation	Data	Result
Diameter shaft (d)	$Te = \frac{\pi}{16} \times \tau \times d^3$	$Te = 2195.33\ Nmm$ $\tau = 105.75\ N/mm^2$	4.77 mm

After performing the calculations, the minimum diameter of the lower shaft was determined to be Ø4.77 mm. In the construction of the bitumen mixer, a mixing blade shaft with a diameter of Ø15 mm was used. The use of a shaft with a diameter of Ø15 mm was intended to ensure safety, accommodate the dimensions of the mixing blades, and optimize the bitumen mixing process.

3.5. Results

This machine testing process was conducted to evaluate the performance of the bitumen mixer that had been previously designed and assembled. The testing was conducted in two stages. The first stage involved testing with bitumen without any reinforcing materials, while the second stage involved testing with a bitumen mixture containing plastic powder as a reinforcing material. The purpose of this testing was to measure the capability of each machine component particularly the transmission system, which includes the belt and pulley to safely and efficiently transmit rotational force from the drive motor to the mixing shaft.

3.5.1. Testing with bitumen without reinforcing materials

This first testing phase was conducted to verify that all components of the transmission system are capable of transmitting rotational force from the drive motor to the agitator shaft smoothly, safely, and without excessive vibration. In this stage, liquid bitumen without any reinforcing additives was used, which had been preheated to a temperature of 160°C. This testing stage also served to evaluate the performance of the inverter as a speed controller and the thermostat as a temperature control element within the mixing control system [12]. An illustration of the machine testing process can be seen in Figure 7.



Figure 7. Machine Testing Process

Based on the test results, all components of the bitumen mixer such as the belt and pulley transmission system were able to effectively transmit rotational force from the drive motor to the mixing shaft without excessive vibration. The rotational speed produced by the transmission system was also found to be constant, with no significant fluctuations. The inverter component was found to function optimally in regulating the mixing speed, while the thermostat was able to maintain a stable temperature throughout the mixing process [13]. An image of the machine in operation can be seen in Figure 8.

© 2026 The Author(s)
This work is licensed under a Creative Commons Attribution-ShareAlike 4.0 International License
ISSN: 3110-1577



Figure 8. A Bitumen Mixer in Operation

3.5.2. Testing with bitumen and reinforcing material mixtures

The second testing phase was conducted to ensure that the mixing process could produce a uniform and homogeneous mixture of bitumen and reinforcing material. In this phase, liquid bitumen was combined with a plastic powder as the reinforcing material. The testing process using the reinforcing material mixture is shown in Figure 9.



Figure 9. Testing Process for a Bitumen Mixer Using a Reinforcing Material Blend

The test results show that the final mixture of bitumen and reinforcing material was thoroughly blended, with no lumps or air bubbles detected in the final product. This indicates that the rotational speed of the mixing shaft was sufficiently constant and that the temperature control system functioned properly, keeping the specimen temperature stable throughout the mixing process [14]. Images of the reinforcing material mixture and the final result of the mixing process can be seen in Figure 10.



Figure 10. Final Result of the Mixing Process

© 2026 The Author(s)
This work is licensed under a Creative Commons Attribution-ShareAlike 4.0 International License
ISSN: 3110-1577

4. Conclusion

The main conclusion(s) of the study should be presented in a short conclusion statement highlighting the This study aims to design a safe and efficient mixing shaft for an asphalt mixing machine through force analysis, diameter calculations, and direct testing. Based on all the design results, calculations, and tests that have been conducted, the following conclusions were reached:

The loads acting on the agitator shaft of the bitumen mixer have been analyzed based on the working loads imposed on the system. The force acting on the mixing blade (Fblade) was determined to be 22.16 N, while the force on the pulley (F_{pulley}) was 233.27 N. A 1 HP, 3-phase electric motor, through a 1:2 pulley ratio, produces a total torque of 457.4 Nmm and an axial force of 228 N. Force equilibrium analysis yields support reactions RDV = 506.48 N and REV = −251.05 N, with point D as the critical point having the largest bending moment of −54.585.18 Nmm.

The minimum required shaft diameter for the asphalt mixer has been successfully determined. The drive shaft is made of St37 steel with an allowable shear stress of τ = 69.38 N/mm^2 and an equivalent torque of 109.174.19 Nmm, resulting in a minimum diameter of Ø20.01 mm. The diameter used for the transmission shaft is Ø25 mm to meet the safety factor and accommodate the bearing dimensions. The lower shaft is made of SS304 stainless steel with a permissible shear stress of τ = 105.75 N/mm^2 and an equivalent torque of 2.195.33 Nmm, resulting in a minimum diameter of Ø4.77 mm. The diameter used for the lower shaft is Ø15 mm to ensure the safety factor is met and to accommodate the dimensions of the mixing blades.

Author Contributions

All authors have equal contributions to the paper. All the authors have read and approved the final manuscript.

Funding

No funding support was received.

Declaration of Conflicting Interests.

The author declared no potential conflicts of interest with respect to the research, authorship, and/ or publication of this article.

Data Availability

The datasets generated during and/ or analysed during the current study are available from the corresponding author on reasonable request.

Declaration on AI Use

The authors declare that no artificial intelligence (AI) or AI-assisted tools were used in the preparation of this manuscript.

References

[1] A. Firdaus and R. Priyatna, "Karakteristik dan pemanfaatan bitumen aspal dalam konstruksi jalan raya di Indonesia," *Jurnal Konstruksi dan Infrastruktur*, vol. 8, no. 2, pp. 87–96, 2020.

[2] J. Wang, R. Zhang, H. Zhou, W. Huang, D. Feng, and X. Li, "Optimization of asphalt mix design considering mixture performance, environmental impact, and life cycle cost," *Journal of Cleaner Production*, vol. 512, Art. no. 145618, 2025, doi: 10.1016/j.jclepro.2025.145618.

[3] S. D. Meyrena and R. W. Amelia, "Analisis pendayagunaan limbah plastik menjadi ecopaving sebagai upaya pengurangan sampah," *Indonesian Journal of Conservation*, vol. 9, no. 2, pp. 96–100, 2020, doi: 10.15294/ijc.v9i2.27549.

[4] S. Kadek, P. Angella, and A. Dwijoko, "Pengaruh penambahan limbah plastik terhadap sifat mekanis campuran bitumen aspal," *Jurnal Teknik Sipil dan Lingkungan*, vol. 9, no. 1, pp. 33–42, 2024.

[5] D. Permana, A. Rahman, and M. Zain, "Pengaruh kecepatan putaran pengaduk terhadap homogenitas campuran bitumen dan plastik sebagai material perkerasan jalan," *Jurnal Rekayasa Infrastruktur*, vol. 10, no. 1, pp. 55–64, 2024.

[6] R. S. Khurmi and J. K. Gupta, *Theory of Machines*, 14th ed. New Delhi, India: S. Chand & Co. Ltd., 2005.

[7] T. Martina, M. Hasan, and A. Setiawan, "Pengaruh parameter operasional terhadap homogenitas campuran pada mesin mixer bitumen aspal," *Jurnal Teknik Mesin dan Mekatronika*, vol. 4, no. 2, pp. 67–76, 2019.

[8] A. Adam and S. Wulandari, "Rancang bangun mesin mixer bitumen dengan penggerak motor bensin dan pemanas api kompor untuk campuran aspal," *Jurnal Teknik Mesin Indonesia*, vol. 17, no. 1, pp. 45–52, 2022.

[9] A. Erwin, "Metodologi perancangan poros pada mesin industri: Pendekatan analitik berdasarkan teori elemen mesin," *Jurnal Mekanika dan Sistem Termal*, vol. 2, no. 1, pp. 1–9, 2017.

© 2026 The Author(s)
This work is licensed under a Creative Commons Attribution-ShareAlike 4.0 International License
ISSN: 3110-1577

[10] S. Rahayu and W. Murtinah, "Manajemen pengadaan bahan baku dalam proses produksi industri manufaktur skala kecil dan menengah," *Jurnal Administrasi Bisnis dan Manajemen*, vol. 8, no. 1, pp. 43–52, 2022.

[11] R. Ginting, A. Ibnutama, and H. Suryanata, "Implementasi bill of material dalam manajemen pengadaan bahan baku pada industri manufaktur," *Jurnal Teknik Industri*, vol. 20, no. 2, pp. 145–154, 2019, doi: 10.22219/jtiumm.vol20.no2.145-154.

[12] I. W. Sujana and A. P. Wicaksono, "Analisis kekuatan dan perancangan diameter poros pengaduk pada mesin mixer industri," *Jurnal Teknik Mesin Nasional*, vol. 7, no. 2, pp. 101–110, 2022.

[13] Z. Han, G. P. Ong, M. Li, L. Liu, and L. Sun, "An innovative stage mixing approach for emulsified asphalt cold recycled mixtures," *Construction and Building Materials*, vol. 494, Art. no. 143431, 2025, doi: 10.1016/j.conbuildmat.2025.143431.

[14] S. Qin, T. Meng, Y. Wang, Y. Wang, C. Tao, Q. Zhang, *et al.*, "Different rotation speeds: A novel approach to enhancing chaos and mixing efficiency in multi-shaft stirred reactors," *Chinese Journal of Chemical Engineering*, 2025, doi: 10.1016/j.cjche.2025.03.024.

[15] B. Franco, V. De Simone, V. Di Pasquale, M. Caterino, and R. Iannone, "A project-specific bill of materials framework for material management and cost control in engineer-to-order environments," *International Journal of Production Research*, pp. 1–28, 2026, doi: 10.1080/00207543.2025.2483243.

[16] J. D. Lecka, K. Szudrowicz, and P. T. Lecki, "Design and construction of a test rig for measuring the torsional angle of a circular shaft," *Mebutra*, 2026.

[17] M. Glevitzky, P. Mucea-Ştef, I. Glevitzky, D. M. Popa, and M. Popa, "Enhancing process safety and manufacturing performance through 5M-based causal analysis and source–detection matrices," *Eng*, vol. 7, no. 6, Art. no. 258, 2026, doi: 10.3390/eng7060258.

© 2026 The Author(s)
This work is licensed under a Creative Commons Attribution-ShareAlike 4.0 International License
ISSN: 3110-1577